Instruction manual

Congratulations

We congratulate you on your new caravan and would like to thank you for choosing a quality product from Dethleffs.

Whether you want to enjoy your holidays on good or bad roads, whether you want to have your "holiday home" out in the country, at the seaside or in the mountains: Your Dethleffs caravan will always make sure that you can enjoy your holidays, because the Dethleffs team has been manufacturing caravans for 80 years and knows what is important. This experience shows itself in the well thought-out, cosy and yet highly functional equipment as well as in the outstanding driving characteristics.

Each Dethleffs vehicle is manufactured with great care and the quality is closely checked. This ensures that our products have a long service life. In view of these strict requirements, we guarantee top quality of our products and grant you a six year leakage guarantee of the body in accordance with our guarantee conditions (see Section 1.1).

This instruction manual deals primarily with the body of your caravan. It will give you all important information and tips so that you can enjoy all technical advantages of your Dethleffs caravan to the full. We have also included a chapter on maintenance – and thus on the conservation of value.

In addition, you will find the documents on the chassis and all the various built-in appliances.

For maintenance work or whenever you need some help, please always get in touch with your authorised specialist workshop. They know your caravan best of all and will meet all your requests fast and reliably.

We wish you a lot of fun with your caravan, a relaxing holiday and safe driving at all times.

Your Dethleffs team

© 2014 Dethleffs GmbH & Co. KG, Isny

Caravan - 14-09 - EN

Instruction manual

Vehicle data	
Model:	
Chassis manufacturer:	
Serial number:	
Initial registration:	
Purchased from company:	
Expiry of the guarantee period:	
Key number:	
Chassis number:	
Family Card with long-term warranty	Yes / No
Customer address	
Surname, Christian name:	
Street, no.:	
Postal code, town:	
Dealer's stamp and signature	

We reserve the right to alter the construction, equipment and the scope of delivery. Special equipment is also listed that is not included in the standard scope of delivery. The descriptions and illustrations in this brochure do not relate to a particular version. For all details, only the respective equipment list is valid.

Contents

1 Guarantee 7
1.1 Guarantee conditions 7
1.2 Water ingress test 8
1.2.1 Inspection plan 8
1.2.2 Inspection records 9
1.3 Further inspections 12
1.3.1 Inspection plan for annual inspection 12
1.3.2 Inspection plan for chassis 13
1.3.3 Gas inspection plan 13
1.3.4 Inspection records 14

2 Introduction 17
2.1 General 18
2.2 Environmental tips 19

3 Safety 21
3.1 Fire prevention 21
3.1.1 Avoidance of fire risks 21
3.1.2 Fire-fighting 21
3.1.3 In case of fire 21
3.2 General 22
3.3 Road safety 23
3.4 Towing 24
3.5 Gas system 24
3.5.1 General information 24
3.5.2 Gas bottles 25
3.6 Electrical system 26
3.7 Water system 26

4 Before the journey 27
4.1 Start-up 27
4.2 Registration 27
4.3 Connecting 28
4.4 Tow couplings 29
4.4.1 AKS 3004 stabiliser 29
4.5 Detaching 29
4.6 Payload 30
4.6.1 Terms 30
4.6.2 Calculating the payload 33
4.6.3 Loading the caravan correctly 34
4.6.4 Caravan load, nose weight and axle load . 35
4.6.5 Roof loads 36
4.7 PVC floor covering 37
4.8 Television 37
4.9 Road safety 39

5 During the journey 41
5.1 Driving with the caravan 41
5.2 Brakes 42
5.3 Driving in reverse 42

6 Pitching the caravan 45
6.1 Handbrake 45
6.2 Wheel chocks 46
6.3 Corner steadies 46
6.4 Entrance step (free-standing) 47
6.5 Waste water tank, mobile 48
6.6 240 V connection 48
6.7 Refrigerator 48

7 Living 49
7.1 Doors 49
7.1.1 Conversion door, outside (hinged handle) 49
7.1.2 Conversion door, inside 50
7.1.3 Insect screen on the conversion door, extendable 50
7.1.4 Conversion door blind (variant 1) 51
7.1.5 Conversion door blind (variant 2) 51
7.2 External flaps 52
7.2.1 Flap lock with recessed handle 52
7.2.2 Flap lock, elliptical 53
7.2.3 Flap lock, rectangular 53
7.2.4 Flap lock with push buttons 54
7.2.5 Flap for toilet cassette 54
7.2.6 External flap 240 V connection 55
7.3 Heating 55
7.4 Ventilation 55
7.5 Windows 56
7.5.1 Hinged window with rotary hinges 57
7.5.2 Hinged window with automatic hinges . . 58
7.5.3 Blind and roller insect screen 59
7.5.4 Bug window blind 61
7.6 Skylights 61
7.6.1 Skylight with snap latch 62
7.6.2 Heki skylight (mini and midi) 63
7.6.3 Heki skylight 64
7.7 Lifting roof 66
7.8 Tables 66
7.8.1 Suspension table with fold-out leg 66
7.8.2 Swivel table 67
7.8.3 Swivel table of the rear seating group 68
7.8.4 Lift-off table for the round seating group 68
7.9 Television 69
7.10 Lamps 70
7.11 Beds 71
7.11.1 Bunk bed 71
7.11.2 Bunk bed, folding 71
7.11.3 Fixed bed (gas pressure spring) 72
7.12 Converting seating groups for sleeping . . 73
7.12.1 Bench seating group and side seating group 73
7.12.2 Round seating group with round table . . . 74
7.12.3 Rear seating group 75
7.12.4 Widening the bed into a playing area 76
7.13 Sleeping area partition 77
7.13.1 Sliding door 77
7.13.2 Folding door 77

8 Gas system 79
8.1 General 79
8.2 Gas bottles 80
8.3 Gas consumption 81

Contents

8.4 Changing gas bottles 82
8.5 Gas isolator taps 82
8.6 External gas connection 83
8.7 DuoControl CS switching facility 84

9 Electrical system 87
9.1 General safety instructions 87
9.2 Terms 87
9.3 12 V power supply 88
9.3.1 Living area battery, general (Autark Package) 88
9.3.2 Check the living area battery (Autark Package) 90
9.3.3 Charging the living area battery (Autark Package) 90
9.4 Power pack 92
9.5 Transformer/rectifier EBL 109 (Autark Package) 93
9.5.1 Battery selector switch 94
9.5.2 Charging the battery 94
9.6 Panel LT 109 - Power Pack SE (special equipment) 95
9.6.1 12 V main switch 95
9.6.2 Living area battery charging condition 95
9.7 Panel LT 222 96
9.8 240 V power supply 96
9.8.1 240 V connection 97
9.8.2 Power cable for external 240 V c onnection 97
9.9 Fuses 99
9.9.1 12 V fuses 99
9.9.2 240 V fuse 101
9.10 Connection to the towing vehicle 101
9.10.1 Thirteen-pin plug connection diagram 101
9.10.2 Towing vehicle installation (recommendation) 103

10 Appliances 105
10.1 General 105
10.2 Heater 106
10.2.1 To heat properly 106
10.2.2 Hot-air heater Truma S 3004 (P)/S 5004 107
10.2.3 Circulation fan 109
10.2.4 Airmix comfort package 110
10.2.5 Alde hot-water heater 111
10.2.6 Ultraheat additional electric heater 114
10.2.7 Warming unit for waste water pipes (special equipment) 115
10.2.8 Electrical floor warming unit (special equipment) 116
10.2.9 Floor warming unit/warming unit for waste water tank (special equipment) 117
10.3 Air conditioning unit 118
10.3.1 Air conditioning unit (Teleco) 118
10.3.2 Air conditioning unit (Dometic) 119
10.4 Boiler 120
10.4.1 Models with waste gas vent on the right-hand side of the vehicle 120
10.4.2 Boiler Truma (special equipment) 120
10.4.3 Boiler Alde (special equipment) 123
10.4.4 Water heater Truma 124
10.5 Cooker 125
10.5.1 Gas cooker 126
10.5.2 Gas oven 127
10.5.3 Microwave oven 128
10.5.4 Extractor hood 129
10.6 Refrigerator 129
10.6.1 Refrigerator ventilation grill 129
10.6.2 Operation (Thetford without SES) 130
10.6.3 Operation (Thetford N3000) 131
10.6.4 Refrigerator door locking mechanism 133

11 Sanitary fittings 135
11.1 Water supply, general 135
11.2 Water tank 136
11.2.1 Drinking water filler neck with cap 136
11.2.2 Filling with water 136
11.2.3 Draining water 137
11.3 Waste water tank 137
11.4 Filling the water system 138
11.5 Emptying the water system 139
11.6 Toilet compartment 140
11.7 Toilet 140
11.7.1 Swivel toilet 141
11.7.2 Toilet with separate water tank 141
11.7.3 Removing the cassette 143
11.7.4 Emptying the cassette 143

12 Care 145
12.1 External care 145
12.1.1 Washing with a high-pressure cleaner 145
12.1.2 Washing the vehicle 145
12.1.3 Windows of acrylic glass 146
12.1.4 Hot-dip galvanised chassis 146
12.1.5 Underbody 147
12.1.6 Waste water tank 147
12.2 Internal care 147
12.3 Water system 149
12.3.1 Cleaning the water tank 149
12.3.2 Cleaning the water pipes 149
12.3.3 Disinfecting the water system 150
12.4 Extractor hood 151
12.5 Sink 151
12.5.1 Stainless-steel sink 152
12.5.2 Plastic sink 152
12.6 Winter care 153
12.6.1 Preparations 153
12.6.2 Winter operation 153
12.6.3 At the end of the winter season 153
12.7 Lay-up 154
12.7.1 Temporary lay-up 154
12.7.2 Winter lay-up 155

Contents

12.7.3 Starting up the vehicle after a temporary lay-up or after lay-up over winter 156

13 Maintenance 157
13.1 Inspection work 157
13.2 Maintenance work 157
13.3 Stabilisers 158
13.4 Braking system AL-KO chassis 159
13.5 Alde hot-water heater 159
13.5.1 Checking the fluid level 159
13.5.2 Topping up the heating fluid 160
13.5.3 Bleeding the heating system 160
13.6 Air conditioning unit 161
13.6.1 Air conditioning unit (Teleco) 161
13.6.2 Air conditioning unit (Dometic) 161
13.7 Replacing bulbs and fluorescent tubes ..162
13.7.1 Halogen spotlight 162
13.7.2 Recessed halogen light with housing 163
13.7.3 Children's bed lamp 163
13.8 Wardrobe light with LED 163
13.9 Vehicle identification plate 164
13.10 Warning and information stickers 164

14 Spare parts 165

15 Wheels and tyres 167
15.1 General 167
15.2 Tyre selection 168
15.3 Tyre designations 169
15.4 Handling of tyres 169
15.5 Changing wheels 170
15.5.1 General instructions 170
15.5.2 Tightening torque 170
15.5.3 Changing a wheel 171
15.5.4 Changing the wheel at alloy wheel rims .172
15.6 Spare wheel support 173
15.7 Tyre pressure 173

16 Troubleshooting 175
16.1 Chassis 175
16.2 Braking system 175
16.3 Electrical system 176
16.4 Gas system 177
16.5 Cooker 178
16.5.1 Gas cooker/gas oven 178
16.5.2 Microwave oven 178
16.6 Heater, boiler and water heater 179
16.6.1 Trumatic S 3004 (P) / S 5004 hot-air heater 179
16.6.2 Alde heater/boiler 179
16.6.3 Truma boiler 180
16.6.4 Truma water heater 180
16.7 Refrigerator 181
16.7.1 Thetford refrigerator without SES (error diagnostics) 181
16.7.2 Refrigerator Thetford N3000 182
16.8 Air conditioning unit 182
16.8.1 Teleco 182
16.8.2 Dometic 182
16.9 Water supply 183
16.10 Body 184

17 Special equipment 185
17.1 Weight details for special equipment ... 185

18 Helpful notes 187
18.1 Dethleffs travel tips on the iPhone 187
18.2 Traffic rules in foreign countries 187
18.3 Help on Europe's roads 188
18.4 Speed limits 190
18.5 Driving with low beam in European countries 192
18.6 Sleeping in the vehicle away from camping areas 192
18.7 Gas supply in European countries 194
18.8 Toll regulations in European countries .. 197
18.9 Tips on staying overnight safely during travel 198
18.10 Tips for winter campers 198
18.11 Travel checklists 199

19 Showmen package 201
19.1 Showmen package 201
19.1.1 240 V power supply 201
19.1.2 400 V power supply 201
19.1.4 Power cable for external 400 V connection 203
19.2 Putting the showmen package into operation 204
19.2.1 Establishing the mains water connection to the caravan 204
19.2.2 Filling the cold water pipes 205
19.2.3 Putting the boiler into operation 205
19.2.4 Putting the instantaneous water heater into operation 206
19.2.5 Putting the macerator toilet into operation 206
19.2.6 Putting the ceramic hob into operation . 207
19.3 Making the showmen package winter-proof 207
19.3.1 Emptying the water pipes 207
19.3.2 Emptying the water supply line of the macerator toilet 208
19.3.3 Emptying macerator toilet 208
19.3.4 Emptying the boiler 208
19.3.5 Emptying the instantaneous water heater 209

Contents

1 Guarantee

1.1 Guarantee conditions

1. In addition to the legal guarantee and product warranty rights due to the customer, Dethleffs GmbH & Co. KG may also grant a guarantee of six years that the vehicles constructed by the company are sealed in such a manner that moisture cannot penetrate from the outside into the interior of the vehicle.
   The guarantee obligations do not apply if the leakage is a result of improper handling of the windows, doors and skylights or damage that has not been properly repaired. Damage that is caused by forces of nature (e.g. flooding) is not covered by the guarantee. The guarantee extensions include only the correct repair work. Conversion or diminution as well as travelling expenses or other indirect costs are not covered by the guarantee.
2. When dealing with a case of leakage covered under the conditions of this guarantee, Dethleffs GmbH & Co. KG is obliged to rectify the defective vehicle part concerned by repairing it free of charge or replacing the part, depending on what is necessary to immediately to repair the damage.
   Defects are to be rectified by Dethleffs GmbH & Co. KG or by an authorised specialist workshop in accordance with the guidelines of Dethleffs GmbH & Co. KG.
3. The prerequisite for this guarantee is that the vehicle must be presented once a year to an authorised specialist workshop for an inspection. The presentation must take place 2 months at the latest after the anniversary of the initial registration (or delivery).
   If the inspection is not carried out according to schedule, this will nullify your warranty. It cannot be renewed by carrying out an inspection at a later time.
   As proof that the inspection has been completed, there are designated coupons in the Dethleffs GmbH & Co. KG guarantee booklet where inspection stamps are to be glued and endorsed by a stamp, the date and the signature of a respective Dethleffs dealer.
4. The guarantee begins on the day of the initial registration or delivery of the vehicle to the customer, 1 year at the latest after delivery to the dealer, and is valid while the vehicle is in use, for 6 years at the longest. If initial registration of the vehicle precedes taking delivery, the warranty commences on the vehicle's initial registration date (warranty qualifying date). A change of ownership of the purchased object has no effect on the guarantee obligations. The guarantee expires if the terms outlined in Paragraph 3 are not complied with. The performance of guarantee work does not increase the guarantee period.
5. Parts installed to rectify faults are also guaranteed under the terms of the guarantee until the guarantee period expires.
6. If leakage occurs, the owner must notify Dethleffs GmbH & Co. KG or a Dethleffs dealer of this in writing within 15 days of its detection. The guarantee certificate and the corresponding guarantee stamps must be included with the notification. If notification of leakage does not occur within the time limit stated, no claims can be made under the terms of the guarantee.
   Remedying of leakage will take place after approval has been given by Dethleffs GmbH & Co. KG.
7. The costs of the inspection are to be paid by the party covered by the guarantee.
8. As far as legally permissible, the court responsible for Isny will be agreed upon as the venue for jurisdiction.

1 Guarantee

1.2 Water ingress test

1.2.1 Inspection plan

Pos.	Component	Activity
1.1	Wheel housing	Visual check
1.2	Rear wall floor plateau connection	Visual check
1.2.1	Side wall in the direction of travel left connection	Visual check
1.2.2	Side wall in the direction of travel right connection	Visual check
1.3	Front wall floor plateau connection	Visual check
1.3.1	Side wall in the direction of travel left connection	Visual check
1.3.2	Side wall in the direction of travel right connection	Visual check
1.4	Side wall floor plateau right connection	Visual check
1.5	Side wall floor plateau left connection	Visual check
1.6	Base frame with base frame cut-outs	Visual check
1.7	State check of the outer metal sheets of side panels as well as of the parts made of glass-fibre reinforced plastic (GRP)	Visual check
1.8	Check the status of the window rubbers, expansion joints, sealing joints	Visual check
2.1	Measure the floor plateau at this connection point with a moisture measuring device, write down the corresponding values with the date of the assessment. Prescribed maximum values – up to 20% normal.	Measuring If the values lie above 20%, check if it is due to accumulated condensation.
2.2	Measure inside the vehicle (walls, window sections, roof, etc.), note changes in the colour of the decor. Prescribed maximum values – up to 20% normal.	Measuring If the values lie above 20%, check if it is due to accumulated condensation.
3.1	Rear wall floor plateau connection	Spray with Dethleffs special weatherproof solution
3.2	Front wall floor plateau connection	Spray with Dethleffs special weatherproof solution
3.3	Side wall floor plateau right connection	Spray with Dethleffs special weatherproof solution
3.4	Side wall floor plateau left connection	Spray with Dethleffs special weatherproof solution
3.5	Openings/ducts for cables, gas lines and air circulation	Spray with Dethleffs special weatherproof solution

We reserve the right to modify the inspection plan.

1 Guarantee

1.2.2 Inspection records

Delivery

Signature, date and stamp of the Dethleffs dealer:

1st year

Signature, date and stamp of the Dethleffs dealer:

Water ingress test

Paste inspection stamp here (garage)

- ❍ Water ingress test 1st year
  - ❍ No defects found
  - ❍ Found defects:

Should it be determined during an inspection that additional work is necessary, then the carrying out of this work is dependent on the customer commissioning this to be done. Please also adhere to the service intervals stipulated by the manufacturers of the individual equipment. Information is included in the service documents enclosed.

1 Guarantee

2nd year

Signature, date and stamp of the Dethleffs dealer:

Water ingress test

Paste inspection stamp here (garage)

❍ Water ingress test 2nd year

- ❍ No defects found
- ❍ Found defects:

3rd year

Signature, date and stamp of the Dethleffs dealer:

Water ingress test

Paste inspection stamp here (garage)

❍ Water ingress test 3rd year

- ❍ No defects found
- ❍ Found defects:

Should it be determined during an inspection that additional work is necessary, then the carrying out of this work is dependent on the customer commissioning this to be done. Please also adhere to the service intervals stipulated by the manufacturers of the individual equipment. Information is included in the service documents enclosed.

1 Guarantee

4th year	Water ingress test
Signature, date and stamp of the Dethleffs dealer:	**Paste inspection stamp here (garage)**

❍ Water ingress test 4th year

- ❍ No defects found
- ❍ Found defects:

5th year	Water ingress test
Signature, date and stamp of the Dethleffs dealer:	**Paste inspection stamp here (garage)**

❍ Water ingress test 5th year

- ❍ No defects found
- ❍ Found defects:

Should it be determined during an inspection that additional work is necessary, then the carrying out of this work is dependent on the customer commissioning this to be done. Please also adhere to the service intervals stipulated by the manufacturers of the individual equipment. Information is included in the service documents enclosed.

1 Guarantee

1.3 Further inspections

1.3.1 Inspection plan for annual inspection

▷ The annual inspection is not bound to the 6-year water ingress test, but should nevertheless be carried out annually.

Pos.	Component	Activity	Interval
1	Skylights	Remove the inside frame of the skylights and tighten the screw connections of the securing clips	1st year
2	Refrigerator, heater, kitchenette, storage flap locks, water system, interior electrics	Function check	Annually
3	Waste water system, toilet, autonomy package (optional), screeens and blinds	Visual and function check	Annually
4	Windows, skylights	Function check, applying talc to the rubber seals	Annually
5	Hot-water heater (Alde)	Check fluid level	Annually
6	Hot-water heater (Alde)	Replace heating fluid	Every 2 years

We reserve the right to modify the inspection plan.

1.3.2 Inspection plan for chassis

▷ The chassis inspection is not bound to the 6-year water ingress test, but should nevertheless be carried out annually. Please also observe the respective instructions of the manufacturer (AL-KO).

Pos.	Component	Activity	Interval
1	Front wheel	Lubricate, check wheel rims for damage, visual check of the tyres, check threaded spindle and crank	Annually
2	Stabiliser, friction linings	Check wear indication	Annually
3	Accumulator	Lubricate or oil the slide and articulation points	Annually
4	Corner steadies	Check	Annually
5	Joints, hinges and levers on the chassis	Lubricate	Annually
6	Wheel attachment	Tighten the wheel nuts, check tyre bearings	Annually
7	Slotted nut on the wheel	Check position and fit lock mechanism##	Annually
8	Tyres and wheel rims	Air pressure check (see Section 15.7), visual check for damage, tread depth at least 2 mm	Annually
9	Brakes, brake lining	Check and adjust if necessary; lining thickness min. 1.6 mm	Annually
10	Brake drums	Visual check for wear and rust, check spring tension	Annually
11	Outside lighting	Function check	Annually
12	Overrun brake	Function check	Annually
13	Brake cable assembly	Visual check	Annually
14	Chassis underbody	Check bolts are firmly secured	Annually

We reserve the right to modify the inspection plan.

1.3.3 Gas inspection plan

▷ The gas inspection is prescribed by law and must be carried out every two years.

Pos.	Component	Activity	Interval
1	Gas system	Official gas inspection	Every 2 years

1 Guarantee

1.3.4 Inspection records

Delivery

Signature, date and stamp of the Dethleffs dealer:

1st year

Signature, date and stamp of the Dethleffs dealer:

- ❍ Chassis inspection
- ❍ Annual inspection 1st year
  - ❍ No defects found
  - ❍ Found defects:

Should it be determined during an inspection that additional work is necessary, then the carrying out of this work is dependent on the customer commissioning this to be done. Please also adhere to the service intervals stipulated by the manufacturers of the individual equipment. Information is included in the service documents enclosed.

1 Guarantee

2nd year

Signature, date and stamp of the Dethleffs dealer:

- ❍ Gas inspection
- ❍ Chassis inspection
- ❍ Annual inspection 2nd year
  - ❍ No defects found
  - ❍ Found defects:

3rd year

Signature, date and stamp of the Dethleffs dealer:

- ❍ Chassis inspection
- ❍ Annual inspection 3rd year
  - ❍ No defects found
  - ❍ Found defects:

Should it be determined during an inspection that additional work is necessary, then the carrying out of this work is dependent on the customer commissioning this to be done. Please also adhere to the service intervals stipulated by the manufacturers of the individual equipment. Information is included in the service documents enclosed.

1 Guarantee

4th year

Signature, date and stamp of the Dethleffs dealer:

- ❍ Gas inspection
- ❍ Chassis inspection
- ❍ Annual inspection 4th year
  - ❍ No defects found
  - ❍ Found defects:

5th year

Signature, date and stamp of the Dethleffs dealer:

- ❍ Chassis inspection
- ❍ Annual inspection 5th year
  - ❍ No defects found
  - ❍ Found defects:

Should it be determined during an inspection that additional work is necessary, then the carrying out of this work is dependent on the customer commissioning this to be done. Please also adhere to the service intervals stipulated by the manufacturers of the individual equipment. Information is included in the service documents enclosed.

2 Introduction

Please read this instruction manual completely before using the vehicle for the first time!

Always keep this instruction manual in the vehicle. Also inform all other users of the safety regulations.

▶ The non-observance of this symbol can lead to personal injury.

▷ The non-observance of this symbol can lead to damage being caused to, or inside the vehicle.

▷ This symbol indicates recommendations or special aspects.

▷ This symbol indicates actions which lead to environmental awareness.

With your Dethleffs caravan you will receive a file with the following vehicle manuals and documents:

Dethleffs documents

- Instruction manual
- List of Dethleffs dealers

Additional documents

- Operating and installation instructions of various appliances
- Complete set of documents from the chassis manufacturer
- Test certificate for the gas system in accordance with German regulations

This instruction manual contains sections which describe model-specific equipment or special equipment. These sections are in part not accordingly marked. It may be that your vehicle has not been fitted with this special equipment. In some cases, the actual equipment of your vehicle may therefore be different from that shown in some illustrations and descriptions.

However, your vehicle may be fitted with other special equipment not described in this instruction manual.

Special equipment is described when an explanation is required.

Adhere to the instruction manuals which are separately enclosed.

▷ The details "right", "left", "front" and "rear" always refer to the vehicle in direction of travel.

▷ All dimensions and weight details are "approximate".

Should the vehicle be subjected to damage due to a failure to follow the instructions in this instruction manual, then the guarantee claim is deemed invalid.

Our vehicles are subjected to continuous development. Please understand that we reserve the right to alter the form, equipment and technology. Therefore, no claims can be made against the manufacturer as a result of the contents of this instruction manual. The equipment which was known and included at the time of going to press is described.

2 Introduction

The reprinting, translation and copying, including extracts is not permitted without prior written authorisation from the manufacturer.

▷ The vehicle comes without a wheel brace and vehicle jack. We recommend you buy a commercial wheel brace before first use of your vehicle, in order to have it ready in the case of mishap or emergency. If there is no AL-KO vehicle jack (special equipment for AL-KO chassis), procure a commercial scissors-type jack or hydraulic vehicle jack before first use of your vehicle in order to have it ready in the case of mishap or emergency. Our authorised dealers and service centres will be happy to advise you.

2.1 General

The vehicle is constructed in accordance with the latest technology and the recognised safety regulations. Nevertheless, personal injury may result and the vehicle may be damaged if the safety instructions in this instruction manual are not followed.

Only use the vehicle in a technically impeccable condition. Follow the instructions in the instruction manual.

Malfunctions which impair the safety of persons or the vehicle should be immediately remedied by qualified personnel. To avoid further damages, observe the duty to avert, minimise or mitigate loss for the user during faults.

Have the vehicle's braking and gas systems inspected and repaired by an authorised specialist workshop only.

Alterations to the body are only to be carried out with the authorisation of the manufacturer.

Luggage and accessories may only be transported up to the maximum permissible gross weight.

Observe the test and inspection periods stipulated by the manufacturer.

2 Introduction

2.2 Environmental tips

- Do not impair the tranquility and spruceness of nature.
- Remember that: All kinds of waste water and household waste are not to be disposed of in drains or in the open countryside.
- Collect waste water on board only in the waste water tank or, if need be, in other vessels suitable to this purpose.
- Only empty the waste water tank and toilet cassette or sewage tank at disposal stations at the camping or caravan sites, which are especially provided for this purpose. When stopping in towns and communities, observe the instructions at caravan sites or ask where there are disposal stations.
- Empty waste water tank as often as possible, even when it is not completely full (hygiene).

  If possible, flush out waste water tank and, if necessary, drainage pipe with fresh water every time it is emptied.
- Never allow the toilet cassette or sewage tank to become too full. Empty the toilet cassette or sewage tank frequently, at the latest as soon as the level indicator lights up.
- Separate household waste according to glass, tin cans, plastic and wet waste also when on a journey. Enquire at the town or community authority about disposal points. Household waste is not to be disposed of in waste paper baskets which are situated at car parks.
- Empty waste bins as often as possible into the cans or containers that are provided for this purpose. This helps to avoid unpleasant smells and an accumulation of rubbish on board.
- When parked, do not allow the engine of the towing vehicle to run more than necessary. When running idle, a cold engine releases more contaminants than usual. The running temperature of the engine is achieved more quickly whilst the vehicle is in motion.
- Use an environmentally-friendly WC chemical agent for the WC which can also be biologically degraded and only use small doses.
- When staying in towns and communities for longer periods, search for parking areas which are especially designated for caravans and towing vehicles. Enquire at the town or community authority about parking spaces.
- Always leave the parking places in a clean condition.

2 Introduction

3 Safety

Chapter overview

This chapter contains important safety instructions. The safety instructions are for the protection of persons and property.

The instructions address the following topics:

- fire prevention and what to do in case of fire
- general care of the vehicle
- road safety of the vehicle
- towing
- gas system of the vehicle
- electrical system of the vehicle
- water system of the vehicle

3.1 Fire prevention

3.1.1 Avoidance of fire risks

- ▶ Never leave children in the vehicle unattended.
- ▶ Keep flammable materials clear of heating and cooking appliances.
- ▶ Lights can get very hot. WHen the light is switched on, a safety distance of 30 cm to combustible material has to be maintained. Fire hazard!
- ▶ Never use portable heating or cooking appliances.
- ▶ Only authorised qualified personnel may modify the electrical system, the gas system or the appliances.

3.1.2 Fire-fighting

- ▶ Always carry a dry powder fire extinguisher in the vehicle. The fire extinguisher must be approved, tested and close at hand.
- ▶ The fire extinguisher is not included in the scope of delivery.
- ▶ Have the fire extinguisher tested at regular intervals by authorised qualified personnel. Observe the date of testing.
- ▶ Always keep a fire blanket at hand near the cooker.

3.1.3 In case of fire

- ▶ Evacuate all passengers.
- ▶ Cut off the electrical power supply and disconnect from the mains.
- ▶ Close regulator tap on the gas bottle.
- ▶ Sound the alarm and call the fire brigade.
- ▶ Fight the fire if this is possible without risk.

- ▷ Acquaint yourself with the position and operation of the emergency exits.
- ▷ Keep escape routes clear.
- ▷ Observe the fire extinguisher instructions for use.

All the windows and doors that fulfil the following criteria rate as emergency exists:

- Opening outwards or moving in the horizontal direction
- Opening angle at least 70°
- Diameter of the clear opening at least 450 mm
- Maximum distance to vehicle floor 950 mm

3.2 General

- ▶ The oxygen in the vehicle interior is used up by breathing and the use of gas operated appliances. That is why the oxygen needs to be replaced on a constant basis. For this purpose, forced ventilation options (e.g. skylights with forced ventilation, mushroom-shaped vents or floor vents) are fitted to the vehicle. Never cover or block forced ventilations from the inside or outside with objects such as e.g. a winter mat. Keep forced ventilations clear of snow and leaves. There is a danger of suffocation due to increased CO_2 levels.
- ▶ Observe the headroom of the doors.
- ▶ If a roof rack with ladder is installed, only climb the ladder if the rear corner steadies have been extended or the caravan is connected to the towing vehicle or the caravan has been secured against tilting at the back. Otherwise the caravan can tip over to the back. Danger of falling!

- ▷ As far as the appliances (heater, cooker, refrigerator, etc.) are concerned, the instruction manuals are authoritative. It is imperative that they be observed.
- ▷ Fitting accessories or special equipment can alter the dimensions, weight and road behaviour of the vehicle. Some of the parts must be entered in the vehicle papers.
- ▷ Only use wheel rims and tyres which are approved for the vehicle. Information concerning the size of the approved wheel rims and tyres is included in the vehicle documents or can be obtained from authorised dealers and service centres.
- ▷ Firmly apply the handbrake when parking the vehicle.

- ▷ When leaving the vehicle, it is imperative that all doors, external flaps and windows are closed.
- ▷ Only move the vehicle on the road if the driver has a driver's license valid for the vehicle class.
- ▷ When selling the vehicle, hand over all instruction manuals for the vehicle and the fitted appliances.

3 Safety

3.3 Road safety

- Before commencing the journey, carry out a functional check of indicating and lighting equipment and the brakes.
- If the vehicle has been stationary for a long period (approx. 10 months) have the braking and gas systems checked by an authorised specialist workshop.
- Before starting your journey, remove the television from the support and store it securely.
- Before commencing the journey, place and secure the flat screen and screen support in the initial position. If the screen holder is installed in a TV cabinet: Close TV cabinet.
- During the journey, no persons are to travel inside the caravan.
- Observe the overall height of the vehicle (including roof loads) at underpasses, tunnels, etc.
- In winter, the roof must be free of snow and ice before commencing the journey.
- Before commencing the journey, empty the waste water tank.
- Push in fully the drive-on ramp and lock it into place before commencing the journey.
- Check the tyre pressure before a journey and at 2-week intervals. Wrong tyre pressure causes excessive wear and can lead to damage or even to tyre burst. You can lose control of the vehicle.

- Before commencing the journey, distribute the vehicle payload evenly (see Chapter 4).
- When loading the vehicle and when taking a rest from driving, in order to load luggage or food, for example, observe the maximum permissible gross weight and axle loads (refer to vehicle documents).
- Ensure that the maximum permitted nose weight is not exceeded and that the minimum nose weight does not fall below the minimum. Load the caravan accordingly.
- While driving with your caravan, the towing vehicle must be equipped with two external mirrors.
- Before commencing the journey, ensure that all cupboard doors, the toilet door and all drawers and flaps are secure. Engage the refrigerator door securing device.
- Before commencing the journey, convert the tables to a bed foundation or fasten them in the provided retainer.
- Before commencing the journey, close windows and skylights.
- Before commencing the journey, close all external flaps and lock them.
- Before commencing the journey, remove the external steady legs and retract the steady legs that are fitted to the vehicle.
- Crank the jockey wheel up as far as possible.
- Before commencing the journey, put the antenna in park position.
- During the initial journey and each time after changing a wheel, re-tighten the wheel bolts/wheel nuts after 50 km. Subsequently inspect them at regular intervals in order to ensure that they are firmly seated. See Chapter 15 for the tightening torque.

3 Safety

- ▷ Tyres must not be older than 6 years as the material becomes brittle over time (see Chapter 15).
- ▷ Lower the table of the round seating group at the rear and fix to the bench. In order to do this, use the holding device fitted as standard.

3.4 Towing

- ▶ Care is to be taken when connecting and detaching a trailer. Risk of accident and injury!
- ▶ No persons are to be between the towing vehicle and the trailer during positioning for connecting and detaching.

3.5 Gas system

3.5.1 General information

- ▶ Before starting the journey, when leaving the vehicle or when gas equipment is not in use, close all gas isolator taps and the main isolator tap on the gas bottle.
- ▶ No appliance (e.g. heating or refrigerator) that is operated with an open flame may be operational while fuel is being filled up, on ferries or in the garage. Danger of explosion!
- ▶ If an appliance is operated with an open flame, do not start the appliance up in closed areas (e.g. garages). Danger of poisoning and suffocation!
- ▶ Have the gas system serviced, repaired or altered by an authorised workshop only.
- ▶ Have the gas system checked by an authorised specialist workshop before starting up and according to the national regulations. This also applies for not registered vehicles. For modifications to the gas system have the gas system immediately checked by an authorised specialist workshop.
- ▶ The gas pressure regulator and the exhaust gas pipes also have to be checked. The gas pressure regulator has to be replaced at least every 10 years. The vehicle owner is responsible for seeing that this is carried out.
- ▶ In case of a defect of the gas system (gas odour, high gas consumption) there is danger of explosion! Close the regulator tap on the gas bottle immediately. Open doors and windows and ventilate well.
- ▶ In case of a defect in the gas system: Do not smoke; do not ignite any open flames, and do not operate electric switches (light switches etc.).
- ▶ Before using the cooker make sure that there is sufficient ventilation. Open windows or the skylight.
- ▶ Do not use the gas cooker or gas oven for heating purposes.
- ▶ If there are several gas devices, each gas device must have its own gas isolator tap. If individual gas devices are not in use, close the respective gas isolator tap.
- ▶ Ignition safety valves must close within 1 minute after the gas flame has extinguished. A clicking sound is audible. Check function from time to time.
- ▶ The installed gas appliances are designed for use solely with propane or butane gas or a mixture of both. The gas pressure regulator as well as all installed gas devices are set for a gas pressure of 30 mbar.

- Propane gas is capable of gasification up to -42 °C, whereas butane gas gasifies at 0 °C. Below these temperatures no gas pressure is available. Butane gas is unsuitable for use in winter.
- Regularly inspect the gas tube fitted to the gas bottle connection for tightness. The gas tube must not have any tears and must not be porous. Have the gas tube replaced by an authorised specialist workshop no later than 10 years after the manufacturing date. The operator of the gas system must see to it that the parts are replaced.
- Due to its function and construction, the gas bottle compartment is a space which is open to the exterior. Never cover or block the standard forced ventilation. Otherwise leaking gas cannot be dispersed to the outside.
- Do not use the gas bottle compartment as storage space as it is not moisture-proof.
- Secure the gas bottle compartment in order to prevent unauthorised persons opening it. To do so lock the access.
- The regulator tap on the gas bottle must be accessible.
- Only connect gas-operated devices (e.g. gas grill) which have been designed for a gas pressure of 30 mbar.
- The exhaust gas pipe must be fitted tightly to the heating system and to the vent and must be sealed. The exhaust gas pipe must not show any evidence of damage.
- Exhaust fumes must be able to escape into the atmosphere unhindered and fresh air must be able to enter unhindered. Therefore keep the waste gas vents and intake openings clean and free (e.g. of snow and ice). No snow walls or aprons may be allowed to lie against the vehicle.

3.5.2 Gas bottles

- Gas bottles are only to be transported within the designated gas bottle compartment.
- Place gas bottles vertically in the gas bottle compartment.
- Tie down gas bottles so that they are unable to turn or tilt.
- If the gas bottles are not connected to the gas tube, always place the protective cap on top.
- Close the regulator tap on the gas bottle before the gas pressure regulator or gas tube are removed from the gas bottle.
- Use your hands only to connect the gas pressure regulator or the gas tube to the gas bottles. Do not use any tools.
- Only use special gas pressure regulators with a safety valve designed for vehicle use. Other gas pressure regulators are not permitted and cannot meet the demanding requirements.
- Use the defroster (Eis-Ex) for the gas pressure regulator at temperatures below 5 °C.
- Use only 11 kg or 5 kg gas bottles. Camping gas bottles with a built-in reflux valve (blue bottle with max. 2.5 or 3 kg content) are permitted in exceptional cases with a safety valve.
- Use the shortest possible tube lengths (150 cm max.) for external gas bottles.
- Never block the ventilation openings in the floor under the gas bottles.

3 Safety

3.6 Electrical system

- Only allow qualified personnel to work on the electrical system.
- The electrical system of the caravan should be viewed and tested by a competent electrician preferably at least every three years. If the caravan is used often, annually. The electrician should then issue a report on the state of the electrical system.
- Prior to carrying out work on the electrical system, switch off all devices and lights, disconnect the battery and disconnect the vehicle from the mains.
- Only use original fuses with the stipulated values.
- Only replace defective fuses when the cause of the defect is known and has been remedied.
- Never bridge or repair fuses.

3.7 Water system

- Water left standing in the water tank or in the water pipes becomes undrinkable after a short period. Therefore, before each use of the vehicle, thoroughly clean the water pipes and the water tank. After each use of the vehicle completely empty the water tank and the water pipes.
- In case of lay-ups lasting more than a week, disinfect the water system before using the vehicle.

▷ If the vehicle is not used for several days or if it is not heated when there is a risk of frost, empty the entire water system. Leave the water taps on in central position. Leave the safety/drainage valve (if available) and all drain cocks open. Frost damage to appliances, frost damage to the vehicle and deposits in water-carrying components can be avoided in this way.

4 Before the journey

Chapter overview

This chapter contains important information which has to be noted before commencing your journey or carrying out any tasks before the journey.

The instructions address the following topics:

- initial start-up
- registration of the vehicle
- connecting and detaching to the towing vehicle
- tow coupling
- calculating the payload
- loading the vehicle
- drive-on ramp
- PVC-floor covering
- storing the television

At the end of the chapter there is a checklist which once again summarises the most important points.

4.1 Start-up

▷ During the initial journey and each time after changing a wheel, re-tighten the wheel bolts/wheel nuts after 50 km. Subsequently inspect them at regular intervals in order to ensure that they are firmly seated. See Chapter 15 for the tightening torque.

▷ Check whether the road light system of the towing vehicle corresponds to that of the caravan (see Chapter 9), and whether a rated voltage of 12 V is provided by the towing vehicle.

The caravan is supplied with a set of keys.

Always deposit a replacement key outside the vehicle. Make a note of the key number. Our authorised dealers and workshops can offer assistance in case of loss.

4.2 Registration

The caravan has an EC-type approval.

Your caravan is a vehicle which must be registered. The following documents are required for the registration:

- the registration document
- a confirmation of insurance coverage
- your identity card
- if appropriate, a letter of authorisation to carry out the registration
- a registration application form

Please remember that certain countries require a separate national code sticker in addition to the EU plate.

4 Before the journey

4.3 Connecting

- Care is to be taken when connecting and detaching a trailer. Risk of accident and injury!
- No persons are to be between the towing vehicle and the trailer during positioning for connecting and detaching.
- Observe the permissible nose weight and rear axle load of the towing vehicle. Nose weight and rear axle load must not be exceeded. The values of the nose weight and rear axle load are included in the documents of the vehicle and the tow coupling.
- Ensure that the interior of the coupling is not soiled and that the movable parts of the coupling (not the ball retainer) are lubricated.
- The tow ball is not to be lubricated when using a stabiliser. The friction pads are pressed against the coupling ball and thereby generate an anti-rolling moment. This anti-rolling effect is only guaranteed when the towing vehicle coupling head is free of lubricant and other residues. When lubricating the stabiliser ensure that no lubricant is on the friction pads.

- Caravan with an overrun brake: Do not connect or detach caravan with the overrun brake on.
- In order to connect the vehicle, crank the supporting jockey wheel down and set it down on the ground.
- Do not use the stabilising lever of the stabiliser as a maneuvering aid.

- Check whether the caravan connecting plug fits into the towing vehicle socket. If the connecting plug and socket differ, ask authorised dealers and workshops for adaption possibilities.
- Further information on the stabiliser can be obtained in the manufacturer's instruction manual.

Connecting:

- Connect the caravan (see Section 4.4). The coupling jaw and the ball must interlock and are not to be loosely superposed. The coupling jaw must completely surround the ball.
- Attach the breakaway brake cable with a loop around the towing ball on the coupling device of the tow vehicle. Take the length of the cable into account: The cable may not drag on the ground or initiate the braking function when driving through curves.
- Crank the jockey wheel up as far as possible. Adjust the running role in parallel to the direction of travel and to the draw box.
- Insert the connector plug of the caravan in the socket of the towing vehicle. Ensure that the hooks of the safety cover engage with the plug. The hooks prevent the plug from becoming loose during the journey.
- Put the connection cable in a loose loop across the drawbar. Make sure that it does not touch the ground.
- Check whether the tow coupling is mounted correctly on the coupling ball. Pay attention to the safety indicator.
- Check whether corner steadies and jockey wheel are raised.
- Check the caravan lighting system whilst the towing vehicle is connected.

4 Before the journey

4.4 Tow couplings

▷ Before connecting, ensure that the tow ball of the coupling device is free of dirt and grease.

4.4.1 AKS 3004 stabiliser

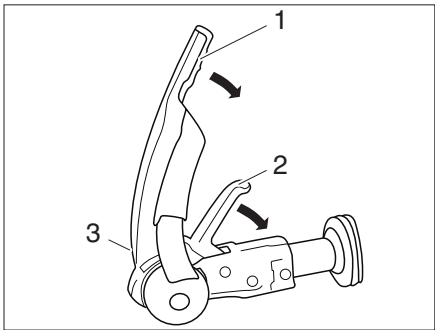

Fig. 1 AKS 3004 stabiliser

Connecting:

- Pull the stabilising lever (Fig. 1,1) upwards as far as it will go.
- Pull the coupling handle (Fig. 1,2) upwards.
- Place the opened stabiliser on the towing ball. The coupling handle must audibly lock back into its initial position.
- In addition, push the coupling handle downwards by hand (not with your foot). Closing and securing is carried out automatically.
- Conduct a visual inspection: The green cylinder of the safety indicator (Fig. 1,3) has to be visible.
- Activate the stabilising mechanism. To do so, push the stabilising lever (Fig. 1,1) downwards as far as it will go.

4.5 Detaching

▶ Care is to be taken when connecting and detaching a trailer. Risk of accident and injury!

▶ Additionally observe the safety instructions with respect to connecting included in this instruction manual.

Detaching:

- Apply the caravan handbrake.
- Place the wheel chocks behind both of the wheels.
- Remove the connector plug of the caravan from the towing vehicle socket and insert it in the retainer which is to be found on the drawbar.
- Remove the breakaway cable from the towing vehicle.
- Crank the jockey wheel down until it is firmly positioned on the ground. Now loosen the tow coupling.
- Using the jockey wheel, lift the drawbar until the towing vehicle can be driven away without risk.

4 Before the journey

4.6 Payload

- Excessive payload and the wrong tyre pressure can cause the tyre to burst. You can lose control of the vehicle.
- Only the maximum permissible gross weight and the mass in a ready-to-drive condition, not the actual weight of the vehicle, is stated in the vehicle documents. For your own safety, we recommend that you have your loaded vehicle weighed on a public weighbridge before you set out on your journey.

- The maximum permissible gross weight stated in the vehicle documents is not to be exceeded by the payload.
- Built-in accessories and special equipment reduce the payload.
- Adhere to the axle load stated in the vehicle documents.

Load the caravan so that the drawbar coupling head is not pushed downwards due to the permissible nose weight. Heavy objects should be close to the axles and a weight centre should be in the centre of the vehicle.

When loading the caravan observe:

- The permissible maximum caravan load
- The maximum permissible nose weight (e.g. 50 kg)
- The minimum nose weight of 25 kg to German Traffic Licencing Regulations ("Straßenverkehrszulassungsordnung" (StVZO))

This information is in the towing vehicle instruction manual.

Maximum permitted payloads

Description	Load (kg)
Bunk beds	100
Folding beds	50

4.6.1 Terms

- In technical and scientific texts the term "mass" has replaced the term "weight". However the term "weight" is still the more common term in general usage. To contribute toward understanding the term "mass" is therefore only used in established phrases in the following passages.
- All specifications according to EU norm DIN EN 1645-2.

Maximum permissible gross weight in a laden condition

The maximum permissible gross weight in a laden condition is the weight that a vehicle may never exceed.

The maximum permissible overall weight in laden condition consists of the **mass in ready-to-drive condition** and of the **payload**.

The manufacturer has specified the maximum permissible gross weight in a laden condition in Field F.1 of the vehicle documents.

4 Before the journey

Mass in ready-to-drive condition

The mass in ready-to-drive condition is the weight of the ready-to-drive standard vehicle.

The mass in ready-to-drive condition is made up as follows:

- Unladen weight (mass of the empty vehicle) with factory-installed standard equipment
- Basic equipment weight

Basic equipment includes all equipment and fluids required for safe and proper vehicle use. The weight of the basic equipment includes:

- Water system filled up to 90% (water tank and pipes)
- Gas bottles filled up to 90%
- A full heating system
- A full toilet flushing system
- The power cables for the 240 V power supply
- The installation kit for an auxiliary battery if an auxiliary battery can be used

The waste water and sewage tanks are empty.

Example for calculating the basic equipment with two gas bottles

Water tank with 40 l	40 kg
Toilet cistern with 10 l	+ 10 kg
Gas bottles (2 x 11 kg $_{gas}$ + 2 x 14 kg $_{bottle}$)	+ 50 kg
240 V power cable	+ 4 kg
Installation kit for auxiliary battery	+ 20 kg
Total	**= 124 kg**

Example for calculating the basic equipment with one gas bottle

Water tank with 40 l	40 kg
Toilet cistern with 10 l	+ 10 kg
Gas bottles (1 x 5 kg $_{gas}$ + 1 x 6 kg $_{bottle}$)	+ 11 kg
240 V power cable	+ 4 kg
Installation kit for auxiliary battery	+ 20 kg
Total	**= 85 kg**

The manufacturer specifies the mass in ready-to-drive conditions in Field G of the vehicle documents.

Payload

The payload is made up as follows:

- Additional equipment
- Personal equipment

Explanations of the individual components of the payload are contained in the following text.

▷ The payload of the vehicle can be increased by reducing the vehicle mass complete in a ready-to-drive condition. To this purpose it is permissible, for example, to empty the liquid tanks or to remove the gas bottles.

4 Before the journey

Additional equipment

Additional equipment includes accessories and special equipment. Examples of additional equipment include:

- Roof rail
- Spare wheel
- Awning
- Bike rack
- Satellite unit
- Microwave oven
- Hot water supply

Chapter 17 lists the weights of the various items of special equipment; they may also be obtained from the manufacturer.

Personal equipment

Personal equipment includes all items in the vehicle that are not included in the additional equipment. For example, personal equipment can include the following:

- Foodstuffs
- Crockery
- Television
- Radio
- Clothes
- Bedding
- Toys
- Books
- Toiletries

No matter where kept, personal equipment also includes:

- Bikes
- Boats
- Surfboards
- Sports equipment

For the personal equipment, according to the applicable regulations, the manufacturer must use a minimum weight that is determined according to the following formula:

Formula

Minimum weight M (kg) = 10 x N + 10 x L + 30

Explanation

N = maximum number of beds, as stated by the manufacturer
L = total length of the caravan in metres, not including the drawbar

Example

Caravan with 4 beds and a length of 5 m:

Minimum weight M (kg) = 10 x 4 $_{\text{beds}}$ + 10 x 5 $_{\text{metres}}$ + 30 = 120 kg

4.6.2 Calculating the payload

- Payload calculation at the manufacturer is partly based on all-inclusive weights. For safety reasons, the maximum permissible gross weight in a laden condition must not be exceeded.
- Only the maximum permissible gross weight and the mass in a ready-to-drive condition, not the actual weight of the vehicle, is stated in the vehicle documents. For your own safety, we recommend that you have your loaded vehicle weighed on a public weighbridge before you set out on your journey.

The payload (see Section 4.6.1) is the difference in weight between

- Maximum permissible gross weight in a laden condition and
- Vehicle mass complete in a ready-to-drive condition.

Example for calculating the payload

	Mass in kg to be calculated	Calculation
Maximum permissible gross weight according to vehicle documents, Field F.1	1500	
Vehicle mass in a ready-to-drive condition, including basic equipment according to vehicle documents, Field G	- 1200	
This results in a permissible payload of	**300**	
Additional equipment	- 40	
For the personal equipment this results in	**= 260**	

The calculation of the payload from the difference between the maximum permissible gross weight in laden condition and the mass specified by the manufacturer in ready-to-drive condition is however only a theoretical value.

Only if the vehicle is weighed with full tanks, full gas bottles and complete additional equipment on a public weighbridge, can the actual payload be determined.

The actual payload is the difference between the maximum permissible gross weight in laden condition and the weighed vehicle weight.

The result is the weight that is permitted for the actual load of the personal equipment.

4.6.3 Loading the caravan correctly

- Never exceed the max. permissible gross weight.
- Distribute the load evenly between the left-hand and right-hand sides of the vehicle.
- Securely store all the objects so that they cannot slide or slip.
- Store heavy objects (awning, canned food, etc.) close to the axles. Low-lying storage compartments whose doors do not open in the direction of travel are particularly suited for storing heavy objects.
- Store lighter objects (laundry) in the roof storage compartments.
- Never concentrate the caravan load at the rear.

The payload arrangement recommended cannot be adhered to consequently as the storage facilities are to be found throughout the complete caravan. Ensure that heavy items are close to the axles and the lower area, i.e. directly above the vehicle floor. Store heavy objects (awning, tin cans, etc.), if possible, in the towing vehicle.

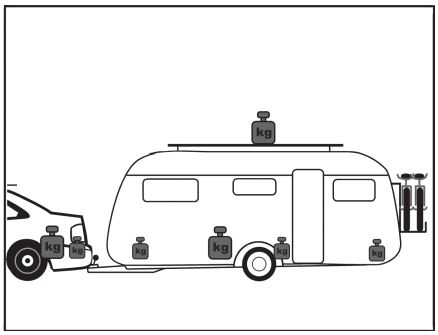

Fig. 2 Incorrect weight distribution

Incorrectly loaded

Loads stored apart from each other (Fig. 2) lead to inclination to skid. Roof loads impair the driving characteristics and move the centre of gravity upwards. This increases the inclination to skid.

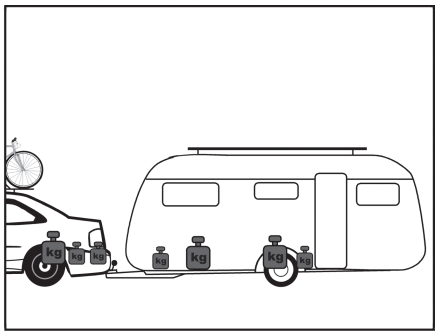

Fig. 3 Correct weight distribution

Correctly loaded

Do not store heavy objects such as awnings, tin cans, etc. in the caravan but rather in the towing vehicle. Secure bicycles on the roof of the towing vehicle. Store all loads close to the axle (Fig. 3).

4.6.4 Caravan load, nose weight and axle load

▶ If the caravan is licenced for a maximum speed of 100 km/h, always set the maximum possible nose weight.

▷ The maximum nose weight of the caravan amounts to 100 kg.

▷ The information on the towing vehicle documents is important for the selection of the car and caravan.

▷ For information about the 100 km rule also refer to Section 5.1.

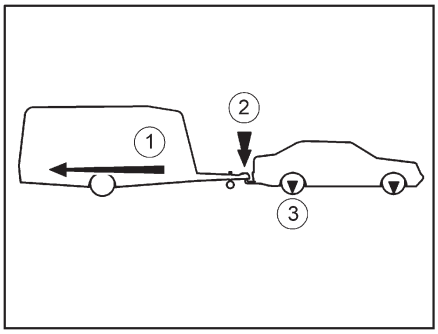

1 Tow load
2 Nose weight
3 Axle load

Fig. 4 Caravan load, nose weight and axle load

Tow load The tow load (Fig. 4,1) stipulated in the towing vehicle documents provides information as to the **maximum weight** which the towing vehicle is permitted to tow. The tow load refers to the **actual** weight of the caravan and **not** to the maximum permissible gross weight of the caravan.

Example The towing vehicle may tow 1200 kg. If the caravan has a maximum permissible gross weight of 1200 kg and in fact weighs 900 kg, it can be loaded with another 300 kg. If however the caravan has a maximum permissible gross weight of 1400 kg, it may only be loaded to a maximum of 1200 kg.

Nose weight The nose weight (Fig. 4,2) specifies how much weight the caravan drawbar can apply to the tow coupling of the towing vehicle. Information is to be found in description of the tow coupling and the vehicle documents. Therefore, a tow coupling with a permissible nose weight of 50 kg may not support a loaded caravan which has a nose weight of 75 kg. Additionally, for the permissible gross weight the nose weight must be taken into consideration. If necessary the payload in the towing vehicle must be reduced by the amount of the nose weight.

The maximum permissible gross weight for the towing vehicle and for the caravan is not to be exceeded.

Only when the nose weight is adapted optimal to the towing vehicle and caravan combination, the towing vehicle and caravan achieves its maximum stability and safety in highway traffic. The optimal nose weight is simultaneously the maximum possible nose weight.

- Please refer to the vehicle documents and the description of the tow coupling for the maximum permissible nose weight.
- If different values are specified in the vehicle documents and in the description of the tow coupling: Select the **lowest** value. This value is the **maximum possible nose weight** for the towing vehicle and caravan.
- Check the nose weight before each journey, e.g. with a nose weighing scales. To obtain a correct value, position the nose weighing scales vertical under the coupling jaw and place the caravan drawbar horizontal.
- The payload in the caravan must be distributed in such a way that the measured nose weight comes as close as possible to the maximum permissible nose weight. The maximum permissible nose weight is not be exceeded.

Axle load

The axle load (Fig. 4,3) is also specified in the vehicle documents of the towing vehicle and provides information concerning the permissible maximum load for the front and rear axles. The axle load may not be exceeded by a trailer. The above illustration shows where which forces act on the car and caravan.

4.6.5 Roof loads

- Only climb onto the roof via the ladder at the rear.
- Only step on the ladder if the rear corner steadies have been extended or if the caravan is connected to the towing vehicle or if the caravan is supported at the rear to prevent it from tilting. Otherwise the caravan can tip over to the back. Danger of falling!
- Take care when stepping onto the ladder. There is danger of slipping if the ladder is wet or icy.
- Take care when stepping onto the roof. There is danger of slipping when the roof is wet or icy.
- Do not place too much load on the roof. The road behavior and the stopping behavior deteriorate as the roof load increases.
- Roofs with glass-fibre reinforced plastic (GRP) surfaces have expansion joints approx. 150 mm wide in the longitudinal direction on both sides of the roof in order to prevent excessive expansion of the roof during extreme sunshine. The GRP covering layer is not bonded in this area. During normal temperatures a slight curvature which expands when heated up is visible. Do not step onto this area or mount subsequent attachments or accessories.

- **The vehicle roof is not suitable for localised load. Before stepping on to the roof, extensively cover the area you will be treading on. Materials with a smooth or soft surface are suitable, for example, a thick polystyrene panel.**
- The maximum permissible roof load amounts to 100 kg.
- If the vehicle is equipped with a roof rail, load racks can be mounted on the roof rail for roof loads (e.g. for surfboards, rubber boats or light canoes). Special girder systems are available as accessories of third-party manufacturers.
- Secure roof loads with tension belts. Do not use rubber expanders.
- Observe the overall height of the vehicle when the roof rack is loaded.

- A clearly visible notice stating the overall height should be attached to the towing vehicle. This eliminates the need for calculations at bridges and thoroughfares.

4 Before the journey

4.7 PVC floor covering

- ▷ Shoes with pointed heels can leave permanent impressions in the PVC-floor covering. Never wear shoes with pointed heels in the vehicle.
- ▷ Rubber mats or long exposure to ketchup, carrot juice, ink, blood or lipstick can discolour the PVC-floor covering. If possible, remove stains from the floor immediately.

4.8 Television

- ▶ Before starting your journey, remove the television from the support and store it securely.
- ▶ Before commencing the journey, place and secure the flat screen and screen support in the initial position. If the screen holder is installed in a TV cabinet: Close TV cabinet.
- ▶ Before commencing the journey, ensure that the antenna is in park position. Danger of accidents! Park position means: The antenna points towards the back, is fully lowered and is locked in this position.

- ▷ For further information about positioning the flat screen see Chapter 7.

Holder in the TV cabinet

The flat screen is attached to a console in the TV cabinet.

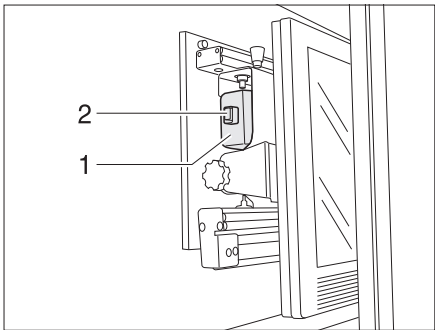

Fig. 5 Holder in the TV cabinet

Storing the flat screen:

- ■ Rotate the flat screen to its initial position and lock it into place.
- ■ Insert the holder for the flat screen on the handle (Fig. 5,1) until the latch (Fig. 5,2) locks into place.
- ■ Close TV cabinet.

Holder with jointed arm The flat screen is fastened to a jointed arm.

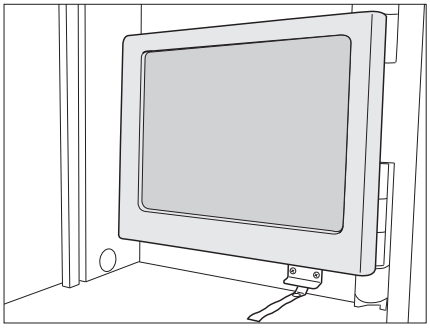

Fig. 6 Holder with jointed arm

Storing the flat screen:

- Swivel flat screen back to its initial position and lock it into place.

Holder with jointed arm The flat screen is fastened to a jointed arm.

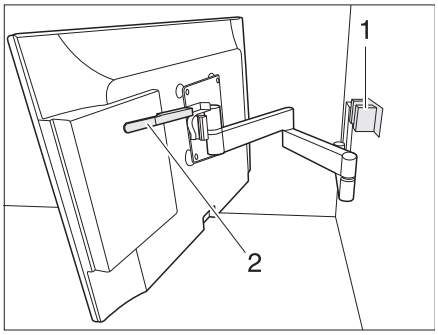

Fig. 7 Holder with jointed arm

Storing the flat screen:

- Swivel flat screen back to its initial position and lock it into place.

4 Before the journey

4.9 Road safety

- Check the tyre pressure before a journey and at 2-week intervals. Wrong tyre pressure causes excessive wear and can lead to damage or even to tyre burst. You can lose control of the vehicle.

Before commencing the journey, work through the checklist:

Towing vehicle with caravan

No.	Checks	Checked
1	All vehicle documents are on board	
2	Two external mirrors fitted to towing vehicle	
3	Nose weight has not been exceeded or fallen below the minimum	
4	Tyres in proper condition	
5	Road lighting system working	
6	Overrun brake functions correctly	
7	Brakes react evenly	
8	When braking, the towing vehicle and caravan remain in the lane	
9	Overall height measured and noted. Keep the height information close at hand in the towing vehicle	

Water system housing body

10	Mobile waste water tank stored away and secured in the gas bottle compartment	
11	Water system emptied in case of risk of frost. Watertaps and drain cocks open	

Housing body, outside

12	Awning completely retracted	
13	Roof free of snow and ice (in winter)	
14	External connections and lines disconnected and stored away	
15	External supports removed	
16	Corner steadies and jockey wheel cranked as high as possible	
17	Wheel chocks removed and stored away	
18	Entrance step securely stored	
19	External flaps closed and locked	
20	Drive-on ramp is fully pushed in and locked in place	
21	Conversion door locked	

Housing body, inside

22	Windows and skylights closed and locked	
23	Television secured in the TV cabinet or removed from the support and stored securely	
24	Television antenna retracted (if one is built in)	
25	Loose parts stored away or fixed in position	
26	Open storage spaces empty	
27	No gas cartridges or other easily flammable materials stored in the roof cupboard of the awning light	
28	Refrigerator door secured	
29	Refrigerator set to 12 V operation	

4 Before the journey

No.	Checks	Checked
30	All drawers and flaps closed	
31	Inner doors and table secured	
32	Dinette table hooked in the lower mounting rail	
33	Lift-off table lowered and secured to the benches	
34	Folding beds or adjustable beds are locked in place	

Gas system

35	Gas bottles firmly fixed in the gas bottle compartment so that they are unable to turn	
36	Protective cap set on top of the gas bottle	
37	Regulator tap on the gas bottle and gas isolator taps are closed	

Electrical system

38	Check the battery voltage of the living area battery (see Chapter 9). If the panel indicates that the battery voltage is too low, the living area battery has to be recharged. Observe the instructions in Chapter 9 ▷ Commence the journey with fully charged living area battery.	

5 During the journey

Chapter overview

This chapter contains instructions on how to drive the caravan.

The instructions address the following topics:

- driving speed
- brakes
- driving in reverse

5.1 Driving with the caravan

- ▶ During the journey no persons are to travel inside the caravan.
- ▶ The caravans have been designed for a technically permissible maximum speed of 100 km/h. Therefore never drive faster than 100 km/h.
- ▶ Please always observe the speed limits in the individual countries (see Chapter 18).

- ▷ During the journey ensure that the angle between the vehicles does not become too narrow. The corners can bump against each other, thus causing major damage to the vehicles. As soon as both vehicles are at an approximate angle of 120° to each other, come to a stop (see Chapter 5.3).
- ▷ In the case of trailer drawbars with support wheels mounted on the side the free steering angle to the corresponding side is reduced slightly.

The main differences between driving with a caravan and driving without a caravan are the increased vehicle width and length, a decreased acceleration and an increased vehicle stopping distance. Therefore, adapt your driving technique to the altered road behaviour resulting from driving with a caravan.

The maximum speed for towing vehicles and trailers currently amounts to 80 km/h in Germany.

If the following prerequisites are fulfilled, the limit is increased to 100 km/h on motorways and roads solely for motor-powered vehicles:

- The caravan is designed technically for a maximum speed of 100 km/h.
- The maximum permissible gross weight of the towing vehicle may not exceed 3.5 t.
- The towing vehicle is equipped with ABS or an anti-lock device.
- The tyres of the caravan are less than 6 years old (see Chapter 15).
- The tyres of the caravan bear at least the speed index "L" (see Chapter 15).
- The caravan is equipped with hydraulic axle shock absorbers.
- The nose weight corresponds to the maximum possible nose weight (see Section 4.6.4).
- The 100-km sticker, which is available from the vehicle registration office, is to be applied to the rear of the caravan.
- The maximum permissible gross weight of the caravan does not exceed the mass in a ready-to-drive condition of the towing vehicle.
- The caravan is equipped with a stabiliser conforming to ISO 11555-1 or with a different technical device whose type approval confirms safe operation up to 120 km/h.
  Optionally the towing vehicle can be equipped with a special electronic, dynamic-driving stability system for towing. A confirmation by the manufacturer for the stability system has to be available and it has to be entered in the vehicle documents.

5 During the journey

- ▷ The driver is responsible for ensuring that the prerequisites for driving at 100 km/h are fulfilled.
- ▷ if the caravan has already been designed by the manufacturer for a speed of 100-km, this is noted in the registration documents of the caravan.
- ▷ Always have the certification of the approval for 100-km operation with you during the journey.

5.2 Brakes

- ▶ Have defects on the braking system immediately remedied by an authorised specialist workshop.

Before each journey

Before each journey, check by means of a braking test:

- Does the overrun brake function?
- Do the brakes react evenly?
- Do the towing vehicle and the caravan remain on track when braking?

5.3 Driving in reverse

- ▷ When driving in reverse, the caravan reacts in exactly the opposite direction to the steering movements of the towing vehicle. If you steer the towing vehicle to the left, the caravan moves to the right!
- ▷ Never back up without a second person to direct you.

As far as all models with an automatic reverse driving mechanism are concerned, the caravan can be reversed without difficulty. In addition to the rolling resistance, residual braking power must be taken into account.

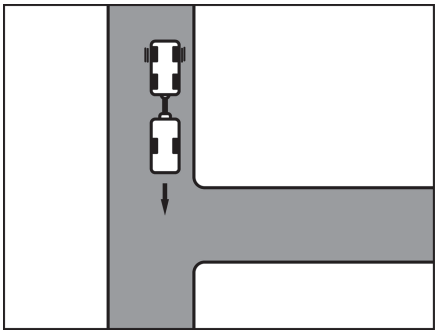

Fig. 8 Approach

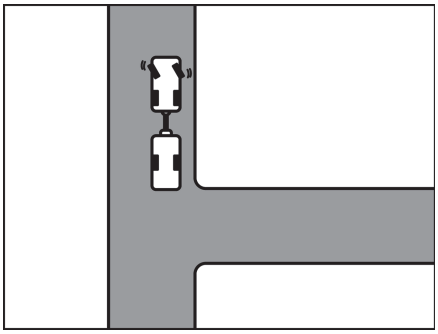

Fig. 9 Steer to the left

Driving in reverse:

- ■ Drive up to the entrance until the rear of the caravan is roughly level with the entrance (Fig. 8).
- ■ With a stationary towing vehicle and trailer turn the steering wheel to the left (Fig. 9).
- ■ Reverse with caution. The caravan moves to the right.

5 During the journey

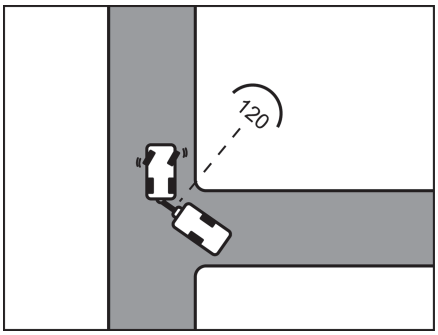

Fig. 10 Approach

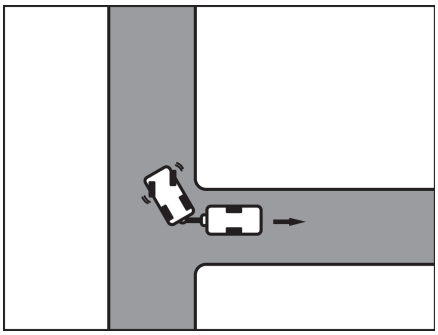

Fig. 11 Steer to the right

▷ The angle between the vehicles must not be too narrow, otherwise the corners will bump against each other. This can cause major damage to the vehicles. Get someone to direct you!

▷ The specified angle also applies for driving forwards!

- As soon as both vehicles are at an approximate angle of 120° to each other, come to a stop (Fig. 10).
- Turn the steering wheel to the right and reverse with caution (Fig. 11).
- Continue to reverse, correcting the steering if necessary.
- For the last 2 to 3 m, turn the steering wheel to the left once more so that the towing vehicle and trailer are in line.

5 During the journey

6 Pitching the caravan

Chapter overview

This chapter contains instructions on how to pitch the vehicle.

The instructions address the following topics:

- handbrake
- wheel chocks
- operation of the supports
- entrance step
- mobile waste water tank
- 240 V connection
- refrigerator

▷ Pitch the vehicle so that it is as horizontal as possible. Secure the vehicle to prevent it from rolling.

▷ Animals (especially mice) can cause great damage to the interior of the vehicle. To prevent this from happening, regularly check the vehicle for damages or animal traces after pitching.

6.1 Handbrake

Firmly apply the handbrake when parking the vehicle.

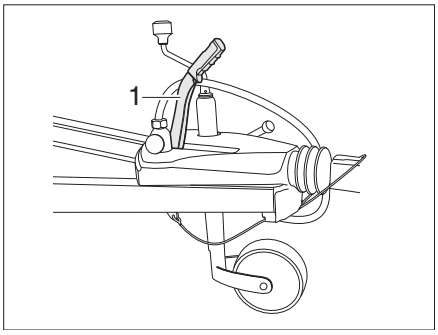

Fig. 12 Handbrake

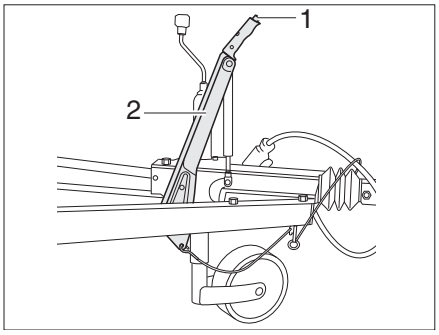

Fig. 13 Alternative: Handbrake

Release the handbrake

■ To release, pull the brake lever (Fig. 12,1) up and then lower it.

Alternative: Release the handbrake

■ In order to release it, press the securing button (Fig. 13,1) and lower the handbrake (Fig. 13,2).

▷ Prior to releasing the handbrake, lift the handbrake slightly. This enables the safety knob which is subjected to spring pressure to be pushed in more lightly.

▷ If there is any risk of frost, release the handbrake every now and then and apply it again. This will prevent it from freezing or rusting. Prior to releasing the handbrake, secure the vehicle so that is cannot roll away.

6 Pitching the caravan

6.2 Wheel chocks

Use the two wheel chocks even when the upward or downward gradients are of a minimum. The wheel chocks are located respectively in the gas bottle compartment of the caravan.

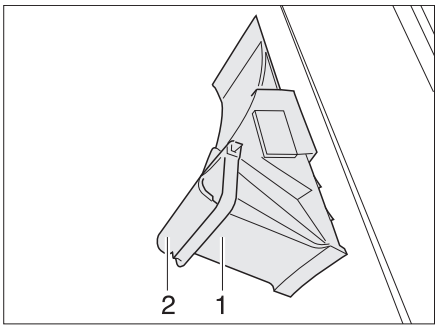

Fig. 14 Wheel chock

Removal:

- Swivel the retaining clip (Fig. 14,2) down.
- Remove the wheel chock (Fig. 14,1) from the holder.

6.3 Corner steadies

▷ Do not use the fitted corner steadies as a vehicle jack. The corner steadies are only for stabilising the pitched vehicle.
The vehicle wheels are not to be raised above the ground.

▷ When pitching the vehicle ensure that load is placed evenly on the corner steadies.

▷ Before driving away, turn in the corner steadies upwards completely until they stop.

▷ When the ground is soft, place a pad or block under corner steadies in order to prevent the vehicle from sinking into the ground.

In order to stabilise the pitched caravan use the corner steadies fitted as standard.

With the assistance of the jockey wheel position the pitched caravan in a horizontal position. For control purposes use a small spirit level.

Crank down the corner steadies after the caravan is in an absolutely horizontal position.

▷ Do not lubricate the spindle of the corner steadies. Spray corner steady with conventional Teflon spray.

6 Pitching the caravan

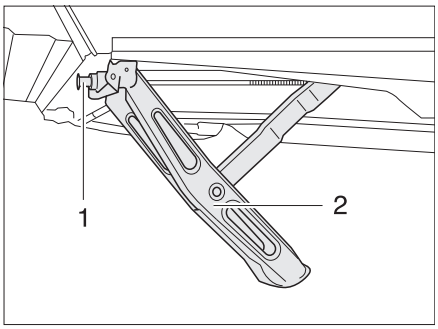

Fig. 15 Corner steady cranked down

Cranking down:

- Place the hand crank provided as standard on the hexagonal nut (Fig. 15,1) of the corner steady (Fig. 15,2).
- Rotate the hand crank in a clockwise direction.
  The corner steady is swung downwards.

Cranking upwards:

- Turn the crank handle anticlockwise.
  The corner steady is swung upwards.

6.4 Entrance step (free-standing)

- Ensure that the entrance step is positioned on an even and stable surface. This will prevent the entrance step from toppling over.
- Do not step on the edges of the entrance step. Danger of slipping!
- Secure the entrance step to the ground, for example, with tent pegs. This way the entrance step cannot slip away.

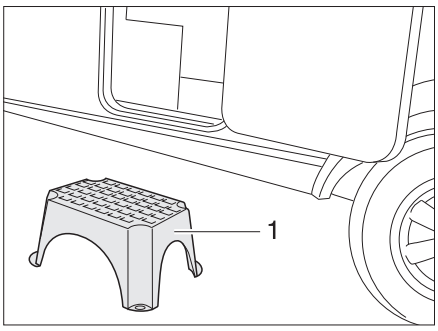

Fig. 16 Entrance step (free-standing)

- Place the entrance step (Fig. 16,1) in front of the entrance to the caravan.

6 Pitching the caravan

6.5 Waste water tank, mobile

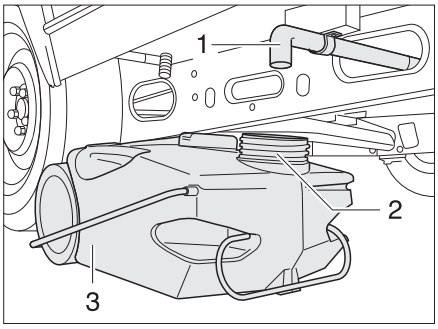

Fig. 17 Waste water tank, mobile

During the journey the waste water tank (Fig. 17,1) is stored in the gas bottle compartment of the caravan. The drain pipe (Fig. 17,3) of the caravan is located on the floor of the vehicle on the left in the direction of travel.

Before using the water system: Place the waste water tank under the caravan so that the opening (Fig. 17,2) of the waster water tank is positioned under the drain pipe.

6.6 240 V connection

The vehicle can be connected to a 240 V power supply (see Chapter 9).

6.7 Refrigerator

▷ The 12 V operation of the refrigerator already functions as soon as a towing vehicle is connected. If the vehicle engine is switched off, set the refrigerator to 240 V operation or gas operation so that the battery is not discharged.

7 Living

Chapter overview

This chapter contains instructions about living in the vehicle.

The instructions address the following topics:

- opening and closing the doors and external flaps
- heating the vehicle
- ventilation of the vehicle
- opening and closing the windows and blinds
- opening and closing the skylights
- converting tables
- positioning the television
- lamps
- extending the seating groups
- using the beds

7.1 Doors

▶ Only drive with the doors locked.

▷ Locking the doors can prevent them from opening of their own accord, e.g. during an accident.

▷ Locked doors also prevent forced entry, e.g. when waiting at a set of traffic lights.

▷ When leaving the vehicle, always lock the doors.

▷ At conversion doors with a left opening locking and opening is carried out mirror-inverted to the shown conversion door.

7.1.1 Conversion door, outside (hinged handle)

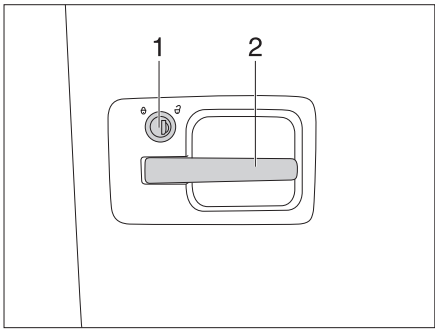

Fig. 18 Door lock, outside

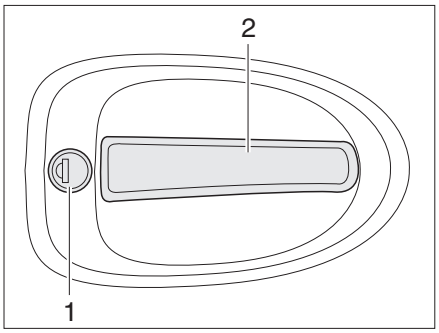

Fig. 19 Door lock, outside

Opening:

- Insert the key in the locking cylinder (Fig. 18,1 and Fig. 19,1) and turn clockwise until the door lock is unlatched.
- Return the key to the central position and remove it.
- Pull on the handle (Fig. 18,2 and Fig. 19,2). The door is open.

Locking:

- Insert the key in the locking cylinder (Fig. 18,1 and Fig. 19,1) and turn it antic-lockwise until the door lock is engaged.
- Return the key to the central position and remove it.

7 Living

7.1.2 Conversion door, inside

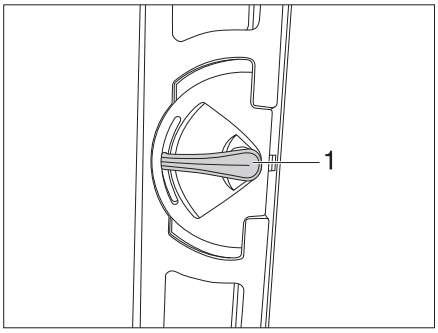

Fig. 20 Variant 1: Door lock of conversion door, inside, open

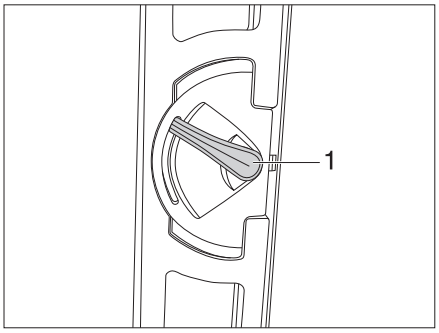

Fig. 21 Variant 1: Door lock of conversion door, inside, locked

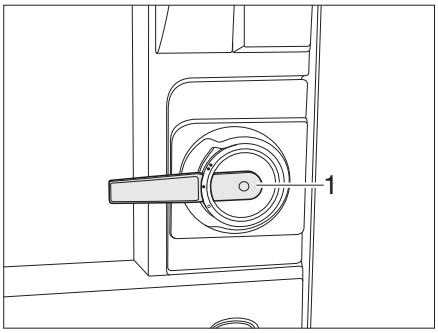

Fig. 22 Variant 2: Door lock of conversion door, inside, open

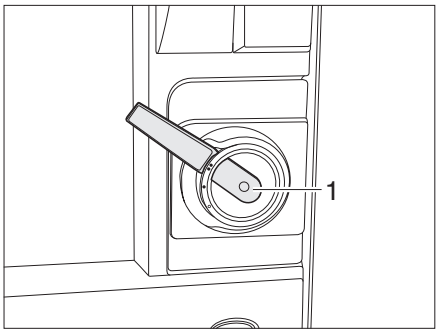

Fig. 23 Variant 2: Door lock of conversion door, inside, locked

Opening:

- Push the handle (Fig. 20,1 or Fig. 22,1) down.

Locking:

- Turn the handle (Fig. 21,1 or Fig. 23,1) approx. 45° upward and leave it in this position.

7.1.3 Insect screen on the conversion door, extendable

▷ Open the insect screen completely before the conversion door is closed.

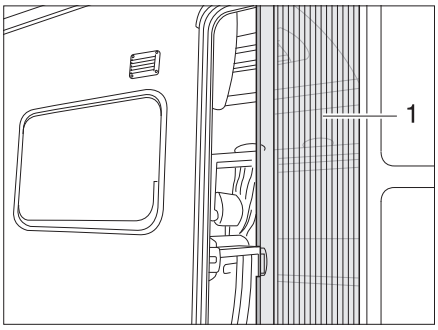

Fig. 24 Insect screen

Closing:

- Pull out the insect screen completely by the bar (Fig. 24,1).

Opening:

- Push the insect screen into its initial position by the bar (Fig. 24,1).

7.1.4 Conversion door blind (variant 1)

The blind of the conversion door is located in the upper blind box.

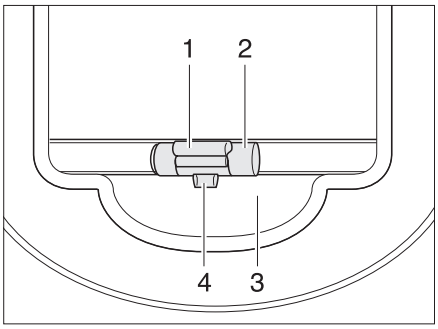

Fig. 25 Blind

Closing:

- Pull blind downwards by the handle (Fig. 25,2) and lock it into place.

Opening:

- Pull blind downwards gently by the handle (Fig. 25,2) and push the unlocking bar (Fig. 25,1) outwards. The lock (Fig. 25,4) is released from the holder (Fig. 25,3).
- Use handle to return the blind slowly to its initial position.

7.1.5 Conversion door blind (variant 2)

The conversion door window is fitted with a Roman shade.

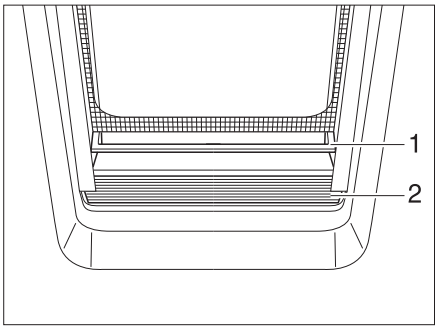

Fig. 26 Roman shade

Closing:

- Grip the Roman shade (Fig. 26,2) in the middle of the holding bar (Fig. 26,1), pull it upwards and then release it at the desired height. The Roman shade will stay at this height.

Opening:

- Grip the Roman shade in the middle of the holding bar and push it down.

7 Living

7.2 External flaps

▷ Before commencing the journey, close all external flaps and lock them.

▷ To open and close the external flaps, open or close all the locks that are fitted to the external flaps.

▷ When leaving the vehicle, close all external flaps.

The external flaps fitted to the vehicle are all fitted with identical locking cylinders. Therefore, all locks can be opened with a single key.

7.2.1 Flap lock with recessed handle

▷ To open the external flap, simultaneously pull all the lock handles fitted to the external flap.

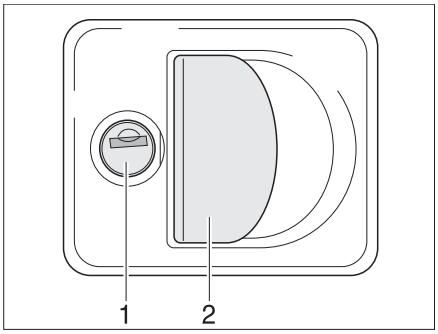

Fig. 27 Flap lock with recessed handle

Opening:

- Insert the key into the locking cylinder (Fig. 27,1) and turn a quarter turn. The flap lock is unlatched.
- Remove the key.
- Pull on the lock handle (Fig. 27,2). The external flap is open.

Closing:

- Firmly close the external flap.
- Insert key into locking cylinder and turn a quarter turn. The flap lock is locked.
- Remove the key.

7.2.2 Flap lock, elliptical

▷ During rain, water can penetrate the opened flap lock. Therefore close the lock handle.

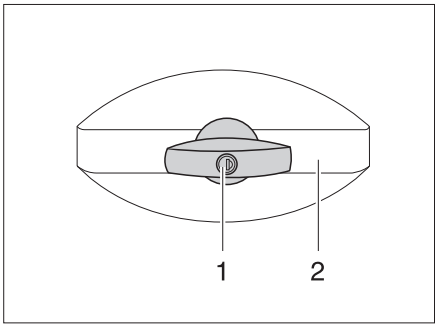

Fig. 28 Flap lock, elliptical, locked

Opening:

- Insert the key into the locking cylinder (Fig. 28,1) and turn a quarter turn anticlockwise. Lock handle (Fig. 28,2) is released.
- Remove the key.
- Turn lock handle one quarter turn in an anticlockwise direction. The flap lock is open.

Closing:

- Firmly close the external flap.
- Turn the lock handle clockwise until it is positioned horizontally. The flap lock is latched in but not yet engaged.
- Insert the key into the locking cylinder.
- Press down lock handle with key inserted and turn key a quarter turn in a clockwise direction. The lock handle will stay bolted.
- Remove the key.

7.2.3 Flap lock, rectangular

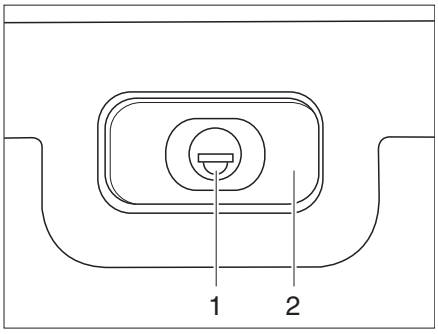

Fig. 29 Flap lock, rectangular, locked

Opening:

- Insert the key into the locking cylinder (Fig. 29,1) and turn a quarter turn. Lock handle (Fig. 29,2) is released.
- Remove the key.
- Turn the lock handle one quarter turn. The flap lock is open.

Closing:

- Firmly close the external flap.
- Turn the lock handle until it is positioned horizontally. The flap lock is latched in but not yet closed.
- Insert the key into the locking cylinder.
- Press down lock handle with key inserted and turn key a quarter turn. The lock handle will stay bolted.
- Remove the key.

7.2.4 Flap lock with push buttons

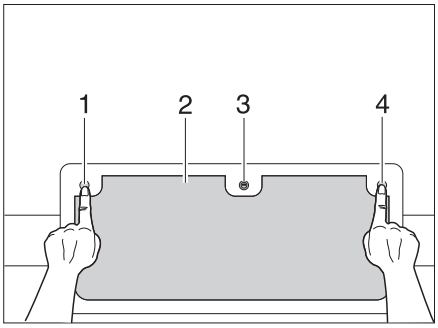

Fig. 30 Flap lock with buttons, locked

Opening:

- Insert the key into the locking cylinder (Fig. 30,3) and turn a quarter turn.
- Remove the key.
- Press in the three push buttons (Fig. 30,1, 3 and 4).

Closing:

- Close the external flap (Fig. 30,2) completely until it engages audibly.
- Insert the key into the locking cylinder (Fig. 30,3) and turn a quarter turn. The lock is locked.
- Remove the key.

7.2.5 Flap for toilet cassette

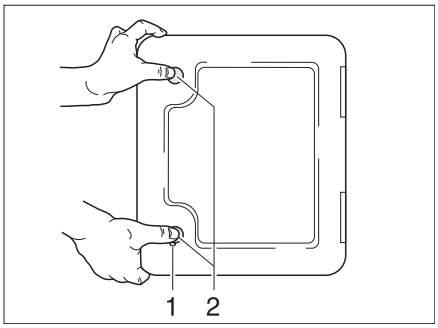

Fig. 31 Flap for toilet cassette

Opening:

- Insert the key into the locking cylinder of the push-button lock (Fig. 31,1) and turn a quarter turn.
- Remove the key.
- Press both push-button locks (Fig. 31,2) simultaneously with your thumb and open the flap for the toilet cassette.

Closing:

- Close the flap for the toilet cassette and press it shut.
- Insert the key into the locking cylinder (Fig. 31,1) and turn a quarter turn.
- Remove the key.

7.2.6 External flap 240 V connection

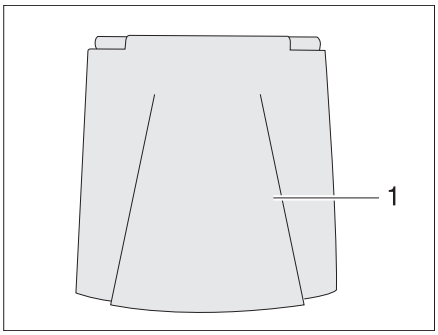

Fig. 32 External flap 240 V connection

Opening:

- Swivel the external flap (Fig. 32,1) upward.

Closing:

- Swivel the external flap (Fig. 32,1) downward and press it shut.

7.3 Heating

▶ During heater operation, the exhaust gas pipe in the wardrobe will get hot. Therefore do not store any heat-sensitive garments immediately next to the exhaust gas pipe (see also Chapter 10).

▷ The operation of the heater is described in Chapter 10.

7.4 Ventilation

▶ The oxygen in the vehicle interior is used up by breathing and the use of gas operated appliances. That is why the oxygen needs to be replaced on a constant basis. For this purpose, forced ventilation options (e.g. skylights with forced ventilation, mushroom-shaped vents or floor vents) are fitted to the vehicle. Never cover or block forced ventilations from the inside or outside with objects such as e.g. a winter mat. Keep forced ventilations clear of snow and leaves. There is a danger of suffocation due to increased CO_2 levels.

▷ Although sufficient ventilation is provided, in certain weather conditions, condensation can form on metal objects (e.g. screwed connections in the floor).

▷ Additional cold spots can occur at thermal "bridges" (e.g. mushroom-shaped vents, skylight edges, sockets, windows, filler necks, flaps, etc.).

7 Living

Condensation

Ensure that there is a continuous exchange of air by providing frequent and efficient ventilation. This is the only method for ensuring that condensation is not formed during cool weather. During the colder season, a pleasant living climate is created if heating output, air distribution and ventilation are synchronised. If the vehicle is laid up for a longer period, occasionally ventilate it well, especially in summer as heat accumulation can occur.

7.5 Windows

- The windows are fitted with a blind and a roller insect screen. After the latch has been released, the blind and roller insect screen automatically spring back to the initial position by tensile force. In order not to damage the tension mechanics, hold onto the blind or roller insect screen and allow it to slowly return to the initial position.
- Do not keep blinds closed over a longer period of time as that can cause increased material wear.
- If the blind is completely closed, exposure to direct sunlight can cause heat to accumulate between the blind and the glass window. The window could be damaged. For that reason, close the blind only 2/3 of the way in direct sunlight.
- Before commencing the journey, close the windows.
- Depending on the weather, close the windows far enough to prevent moisture from entering.
- To open and close the hinged window, open or close all catch levers which are fitted to the hinged window.

- When leaving the vehicle, always close the windows.
- In case of strong temperature differences or in extreme weather conditions, light condensation can form on the double-glazed acrylic glass. The glass is designed in such a way that condensation can evaporate when the external temperature increases. There is no danger of the double-glazed acrylic glass being damaged by condensation.

7 Living

7.5.1 Hinged window with rotary hinges

▷ When opening the hinged windows, ensure that there are no torsional forces. Open and close the hinged windows evenly.

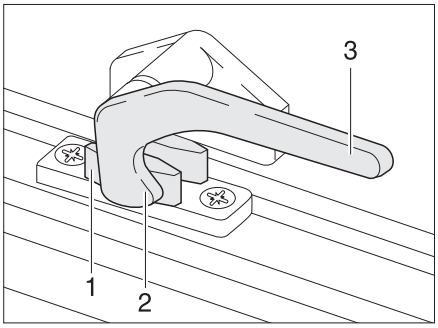

Fig. 33 Catch lever in "closed" position

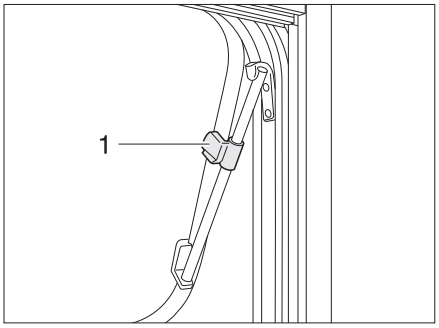

Fig. 34 Hinged window with rotary hinges, open

Opening:

- Turn the catch lever (Fig. 33,3) a quarter turn towards the centre of the window.
- Open the hinged window until the required position has been reached and secure in position using the knurled knob (Fig. 34,1).

The hinged window remains locked in the required position.

Closing:

- Turn the knurled knob (Fig. 34,1) until the latch is released.
- Close the hinged window.
- Turn the catch lever (Fig. 33,3) a quarter turn towards the window frame. The locking catch (Fig. 33,2) is located on the inside of the window catch (Fig. 33,1).

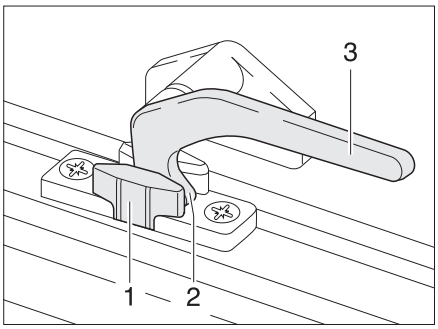

Fig. 35 Catch lever in the "continuous ventilation" position

Continuous ventilation

With the catch lever, the hinged window can be placed in two positions:

- "Continuous ventilation" (Fig. 35)
- "Firmly closed" (Fig. 33)

To place the hinged window into the "continuous ventilation" position:

- Turn the catch lever (Fig. 35,3) a quarter turn towards the centre of the window.
- Lightly open the hinged window outwards.
- Return the catch lever to its initial position. The locking catch (Fig. 35,2) has to be moved into the recess of window catch (Fig. 35,1).

During the journey, the hinged window may not be in the "continuous ventilation" position.

If it rains, the "continuous ventilation" hinged window position could lead to splashing water penetrating the living area. Therefore, close the hinged windows completely.

7.5.2 Hinged window with automatic hinges

▷ Open the window completely in order to unblock the locking device. If the locking device is not unblocked and the window is closed nevertheless, there is the danger of the window being torn due to the massive counter-pressure.

▷ When opening the hinged windows, ensure that there are no torsional forces. Open and close the hinged windows evenly.

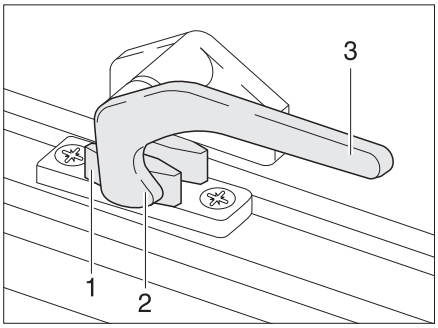

Fig. 36 Catch lever in "closed" position

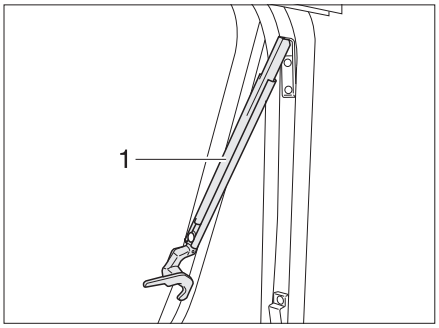

Fig. 37 Hinged window with automatic hinges, open

Opening:

- Turn the catch lever (Fig. 36,3) a quarter turn towards the centre of the window.
- Open the hinged window to the desired latched position. The automatic hinge (Fig. 37,1) locks in place automatically.

The hinged window remains locked in the required position.

Closing:

- Open the hinged window as wide as necessary until the latch releases.
- Close the hinged window.
- Turn the catch lever (Fig. 36,3) a quarter turn towards the window frame. The locking catch (Fig. 36,2) is located on the inside of the window catch (Fig. 36,1).

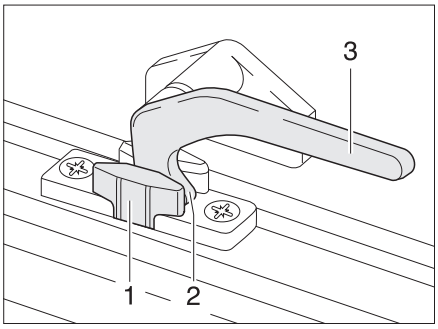

Fig. 38 Catch lever in the "continuous ventilation" position

Continuous ventilation

With the catch lever, the hinged window can be placed in two positions:

- "Continuous ventilation" (Fig. 38)
- "Firmly closed" (Fig. 36).

To place the hinged window into the "continuous ventilation" position:

- Turn the catch lever (Fig. 38,3) a quarter turn towards the centre of the window.
- Lightly open the hinged window outwards.
- Turn the catch lever a quarter turn towards the window frame. The locking catch (Fig. 38,2) has to be moved into the recess of window catch (Fig. 38,1).

During the journey, the hinged window may not be in the "continuous ventilation" position.

If it rains, the "continuous ventilation" hinged window position could lead to splashing water penetrating the living area. Therefore, close the hinged windows completely.

7.5.3 Blind and roller insect screen

▷ Open the blinds and roller screens before starting the journey. If the blinds and roller screens are closed, the spring loads may be damaged through the vibrations and shocks.

▷ Depending on the window size the blinds and roller screens are equipped with one or two handles.

The windows are fitted with a blind and a roller insect screen. The blind and roller insect screen can be adjusted separately.

7 Living

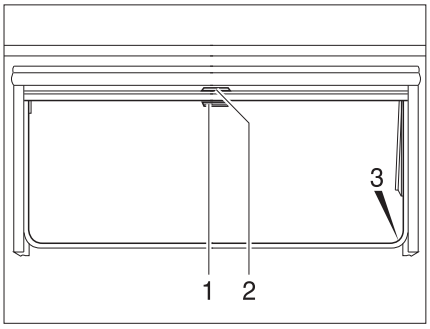

Fig. 39 Hinged window

Blind The blind is located in the upper blind box.

Closing:

- Pull blind at the handle (Fig. 39,2) downwards. If the blind is to be completely closed, it is suspended into the locking devices (Fig. 39,3) situated on both sides of the window frame.

Opening:

- If the blind is completely closed: Press the handle (Fig. 39,2) downwards and, at the same time, tilt it slightly inward. The blind can be taken out of the locking devices situated on both sides of the window frame.
- If the blind is in an intermediate position: Pull the handle (Fig. 39,2) slightly downwards until the locking device releases.
- Use handle to return blind slowly to its initial position.

Roller insect screen The roller insect screen is located in the upper blind box.

Closing:

- Pull the roller insect screen at the handle (Fig. 39,1) downwards and hang it into the locking devices (Fig. 39,3) situated on both sides of the window frame.

Opening:

- Press the handle (Fig. 39,1) downwards and, at the same time, tilt it slightly inward. The roller insect screen can be taken out of the locking devices situated on both sides of the window frame.
- Use handle to return the roller insect screen slowly to its initial position.

7.5.4 Bug window blind

Depending on the model, the bug window is fitted with a blind.

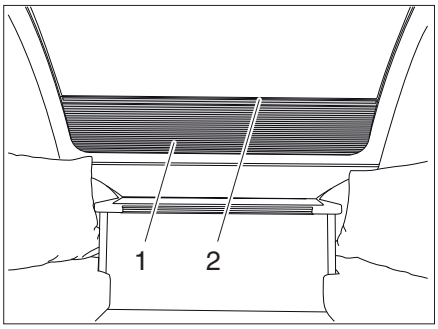

Fig. 40 Bug window blind

Blind The blind is located in the bottom blind box.

Closing:

- Pull the blind upwards at the notch (Fig. 40,2).

Opening:

- Pull the blind (Fig. 40,1) downwards at the notch (Fig. 40,2).

7.6 Skylights

Depending on the model, skylights with or without forced ventilation are fitted to the vehicle. If a skylight is fitted without forced ventilation, the forced ventilation is performed using mushroom-shaped vents.

▶ The apertures for forced ventilation must always be kept open. Never cover or block forced ventilations with objects such as e.g. a winter mat. Keep forced ventilations clear of snow and leaves.

- ▷ The skylights are fitted with a blind or Roman shade and with a roller insect screen or folding insect screen. After the latch has been released, the blind and roller insect screen automatically spring back to the initial position by tensile force. In order not to damage the tension mechanics, hold onto the blind or roller insect screen and allow it to slowly return to the initial position.
- ▷ Do not keep blinds closed over a longer period of time as that can cause increased material wear.
- ▷ If the blind or the Roman shade is completely closed, exposure to direct sunlight can cause heat to accumulate between the blind/the Roman shade and the skylight. The skylight could be damaged. For that reason, close the blind/Roman shade only 2/3 of the way in direct sunlight. Open the skylight slightly or move it to ventilation position.
- ▷ Depending on the weather, close the skylights far enough to prevent moisture from entering.
- ▷ Never step on the skylights.
- ▷ Before commencing the journey, close the skylights.
- ▷ Before commencing the journey, check that the skylights are closed and locked.
- ▷ Before commencing the journey, open the blinds or Roman shades.
- ▷ Apply talc to the rubber seals of the skylights at least once a year.

▷ When leaving the vehicle, always close the skylights.

7.6.1 Skylight with snap latch

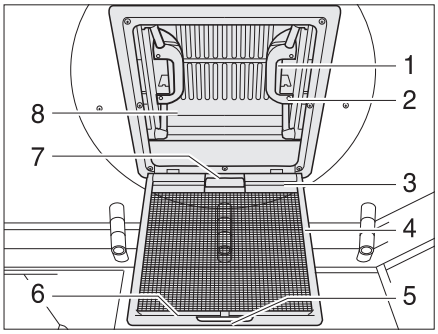

Fig. 41 Skylight with snap latch

The skylight can be pushed upwards either from one side or from both sides. Depending on the version, the skylight is fitted with a blind.

Opening:

- Pull on the handle (Fig. 41,5).
- Fold the insect screen (Fig. 41,4) downwards.
- Push the spring-loaded latch (Fig. 41,1) towards the inside of the skylight (Fig. 41,8). At the same time use the handle (Fig. 41,2) to press the skylight upwards.
- Swing the insect screen upwards (Fig. 41,4) until it latches in place.

Closing:

- Pull on the handle (Fig. 41,5).
- Fold the insect screen (Fig. 41,4) downwards.
- Using both handles (Fig. 41,2), pull down the skylight (Fig. 41,8) with force until the two snap latches (Fig. 41,1) lock into place.
- Swing the insect screen upwards (Fig. 41,4) until it latches in place.

Blind

To close and open the blind:

Closing:

- Pull the handle (Fig. 41,7) of the blind and hook the hook rail (Fig. 41,3) into the retainer (Fig. 41,6) on the insect screen.

Opening:

- Release the hook rail (Fig. 41,3) from the retainer (Fig. 41,6) and feed the blind back slowly.

7.6.2 Heki skylight (mini and midi)

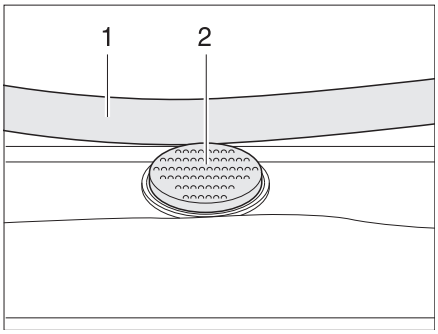

Fig. 42 Safety knob on the Heki skylight

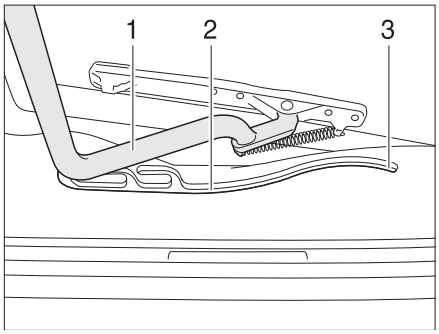

Fig. 43 Heki skylight, guide

The Heki skylight is opened on one side only.

Opening:

- Press the safety knob (Fig. 42,2) and pull the bar (Fig. 42,1) down with both hands.
- Pull the bar (Fig. 43,1) in the guides (Fig. 43,2) to the rearmost position (Fig. 43,3).

Closing:

- Use both hands to push the bar (Fig. 43,1) slightly upwards.
- Push the bar back in the guides.
- Push the bar upwards with both hands until it is above the safety knob (Fig. 42,2).

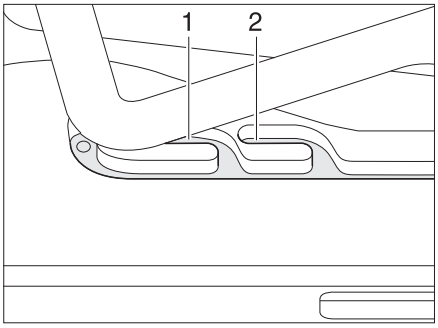

Fig. 44 Heki skylight in ventilation position

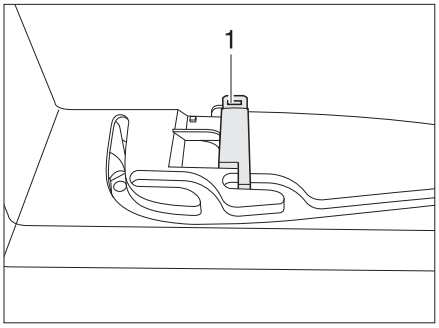

Fig. 45 Ventilation position locking mechanism

Ventilation position

The Heki skylight can be put in two ventilation positions: Bad weather position (Fig. 44,1) and central position (Fig. 44,2). Depending on the model, the skylight can be locked in the central position with the latch (Fig. 45,1).

- Press the safety knob (Fig. 42,2) and pull the bar (Fig. 42,1) down with both hands.
- Pull the bar in the guides (Fig. 43,2) to the desired position.
- Push the bar slightly upwards and into the selected guide (Fig. 44,1 or 2) and lock if necessary.

Roman shade To close and open the Roman shade:

Closing:
- Pull out Roman shade at the handle and release in the required position. The Roman shade will stay in that position.

Opening:
- Slowly push the Roman shade at the handle to its initial position.

Insect screen To close and open the insect screen:

Closing:
- Pull the insect screen by the handle to the opposite handle of the Roman shade.

Opening:
- Press the rear part of the handle of the insect screen. The latch is released.
- Use handle to return the insect screen slowly to its initial position.

7.6.3 Heki skylight

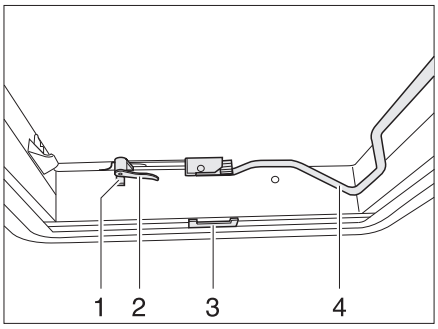

Fig. 46 Heki skylight, closed

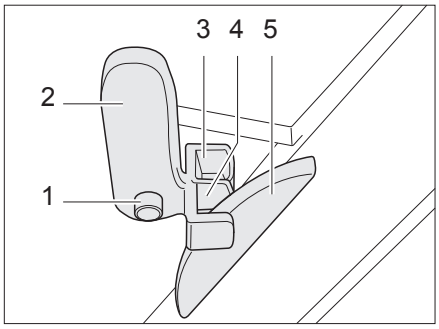

Fig. 47 Heki skylight in ventilation position 1

The Heki skylight may be opened on one side only.

Opening:
- Press the safety knob (Fig. 46,1) and turn the catch lever (Fig. 46,2) one quarter turn inward.
- Pull the bar (Fig. 46,4) downwards out of the latch.
- Press the Heki skylight upwards using the bar.
- Press the bar back into the latch.

Closing:
- Pull the bar (Fig. 46,4) downwards out of the latch.
- Pull the Heki skylight downward using the bar.
- Turn the catch levers (Fig. 46,2 and Fig. 47,2) one quarter turn. The hook of the roof lock (Fig. 47,5) must engage in the upper locking fork (Fig. 47,3).
- Press the bar back into the latch.

Ventilation position (Variant 1):

- Open Heki skylight and push lightly outwards.
- Press the safety knob (Fig. 47,1) and turn the catch lever (Fig. 47,2) back. The hook of the roof lock (Fig. 47,5) must engage in the lower locking fork (Fig. 47,4).
- Press the bar back into the latch.

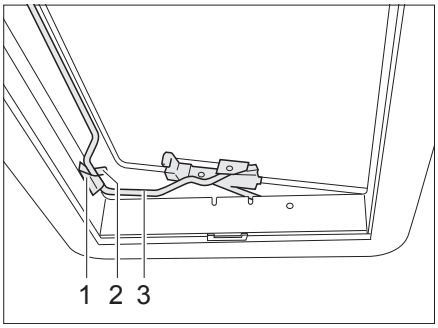

Fig. 48 Heki skylight in ventilation position 2

Ventilation position (Variant 2):

- Open Heki skylight.
- Insert the bar (Fig. 48,3) into the holder (Fig. 48,1).
- Place the lever (Fig. 48,2) over the bar.

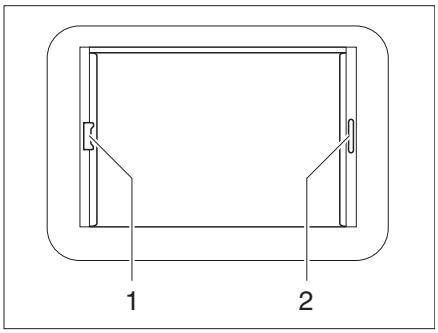

Fig. 49 Heki skylight, blind lock

Roman shade

To close and open the Roman shade:

Closing:

- Pull out Roman shade at the handle (Fig. 49,2) and release in the required position. The Roman shade will stay in that position.

Opening:

- Slowly push the Roman shade at the handle to its initial position.

Roller insect screen

To close and open the roller insect screen:

Closing:

- Pull the roller insect screen at the handle (Fig. 49,1) to the opposite handle of the Roman shade (Fig. 49,2) and allow to engage.

Opening:

- At the back, press the roller insect screen handle upward and unhook the roller insect screen at the Roman shade (Fig. 49,2).
- Use handle to return the roller insect screen slowly to its initial position.

7 Living

7.7 Lifting roof

Depending on the model, the vehicle is fitted with a lifting roof. The internal height of the caravan can be adjusted using the lifting roof.

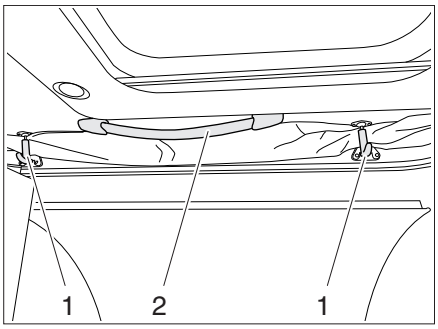

Fig. 50 Lifting roof

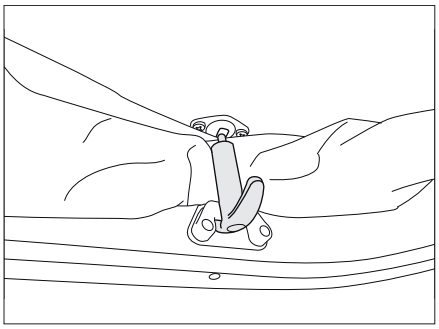

Fig. 51 Fuse

▷ The lifting roof must be closed before commencing the journey.

Opening:

- Release the safeguards (Fig. 50,1) by pulling them lightly.
- Push the lifting roof upwards at the handles (Fig. 50,2).

Closing:

- Pull the lifting roof downwards at the handles (Fig. 50,2).
- First pull one side completely down before locking.
- Lightly pull the safeguards (Fig. 50,1) downwards and hook them in again.

7.8 Tables

7.8.1 Suspension table with fold-out leg

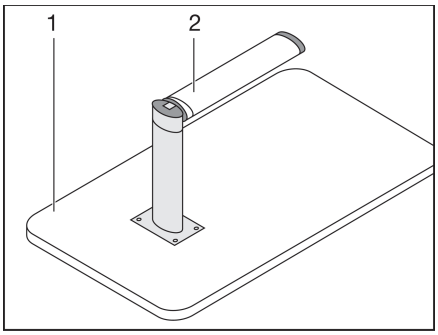

Fig. 52 Bed foundation

The table's fold-out leg enables it to be used as a bed foundation.

Conversion to bed foundation:

- Lift the front of the table-top (Fig. 52,1) by approx. 45°.
- Pull the lower part of the fold-out leg (Fig. 52,2) down and fold through 90°.
- Remove the table from its retainer.
- Insert the table into the lower retainer.

7.8.2 Swivel table

▶ Before commencing the journey, reduce the size of the swivel table and secure it.

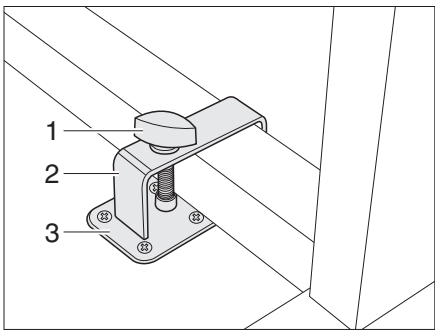

Fig. 53 Latch for swivel table with metal frame

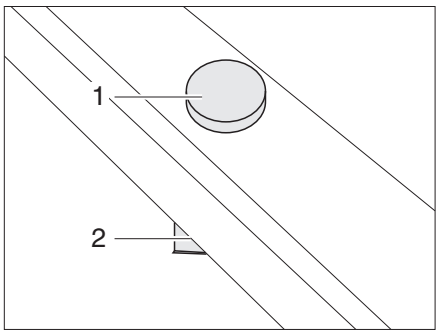

Fig. 54 Latch for swivel table with plastic frame

Locking:

- Place the swivel table next to the holder (Fig. 53,3) or on the holder (Fig. 54,2).
- Place the bar (Fig. 53,2) with the securing bolt (Fig. 53,1) over the table leg.
- Move the bar and possibly also the swivel table in such a way that the securing bolt (Fig. 53,1 or Fig. 54,1) can be screwed into the holder (Fig. 53,3 or Fig. 54,2).
- Screw securing bolt into the holder and tighten firmly.

The swivel table's swivel mechanism enables it to be used as a bed foundation.

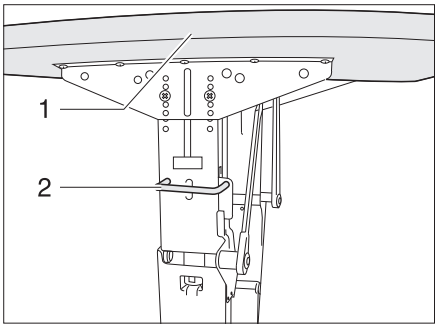

Fig. 55 Lock for swivel table with metal frame

Conversion to bed foundation (swivel table with metal frame):

- Push the handle (Fig. 55,2) upwards.
- Swivel the table-top (Fig. 55,1) down with a circular movement until the handle locks into place.

7.8.3 Swivel table of the rear seating group

The table top can be swiveled into different positions.

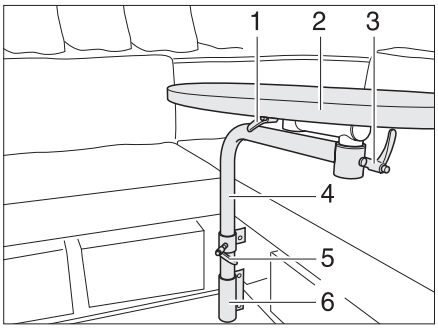

1 Tommy screw
2 Table-top
3 Tommy screw
4 Table leg
5 Tommy screw
6 Holder

Fig. 56 Swivel table

Swivelling the table top

- Loosen the tommy screws (Fig. 56,1, 3 and 5).
- Swivel table top (Fig. 56,2) into required position.
- Tighten the tommy screws again.

The swivel table can be removed for the bed conversion.

Removing the swivel table for bed conversion

- Undo the tommy screw (Fig. 56,5).
- Pull the table top (Fig. 56,2) with the table leg (Fig. 56,4) out of the holder (Fig. 56,6) and put it to one side.

7.8.4 Lift-off table for the round seating group

▷ The lift-off table is not secured to the floor. Before starting the journey, lower the lift-off table to the upper stop and fasten with the accompanying belts to the benches.

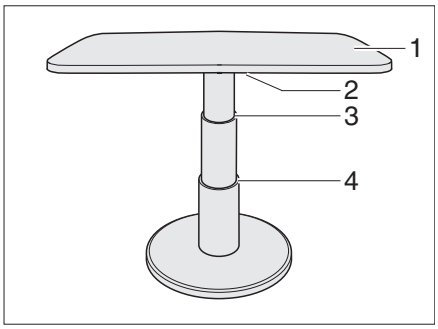

Fig. 57 Lift-off table for the round seating group

The lift-off table's lifting mechanism enables it to be used as a bed foundation.

Conversion to bed foundation:

- Swivel the catch lever (Fig. 57,2) to the left. The lock is open.
- Press the table-top (Fig. 57,1) in the middle downwards to the desired stop limit (Fig. 57,3 or 4) and hold it down.
- Swivel the catch lever to the right. The lift-off table is locked.

7 Living

7.9 Television

- Before starting your journey, remove the television from the support and store it securely.
- Before commencing the journey, place and secure the flat screen and screen support in the initial position. If the screen holder is installed in a TV cabinet: Close TV cabinet.
- Before commencing the journey, ensure that the antenna is in park position. Danger of accidents!

Flat screen in the TV cabinet

The flat screen is attached to a console in the TV cabinet.

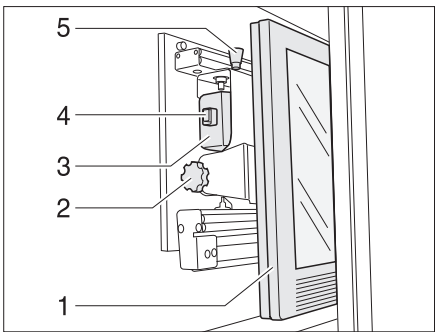

Fig. 58 TV cabinet

Pulling the television console forward:

- Press the release knob (Fig. 58,5) and pull the holder for the flat screen forward as far as possible by the handle (Fig. 58,4).

Swivelling the television console:

- Pull the release knob (Fig. 58,1) and swivel the flat screen (Fig. 58,2) to the desired position.
- Loosen the knurled screw (Fig. 58,3).
- Set the desired angle for the flat screen and re-tighten the knurled screw.

Flat screen with jointed arm

The flat screen is fastened to a jointed arm.

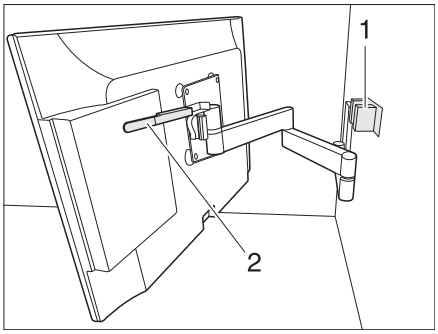

Fig. 59 Holder with jointed arm

Positioning the flat screen with jointed arm:

- Press the lever (Fig. 59,2) downwards to release the flat screen from the latch (Fig. 59,1). Release the lever.
- Swivel the flat screen into the required position.
- Take hold of the flat screen at the top and bottom edge with both hands and set the desired angle of inclination.

Flat screen with swivel arm

The flat screen is fastened to a swivel arm.

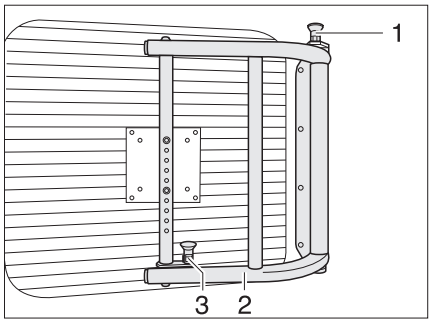

Fig. 60 Swivel arm for flat screen

Positioning the flat screen with swivel arm:

- Pull up the release knobs (Fig. 60,1 and 3) to unlock the swivel arm.
- Swivel the flat screen with the holder (Fig. 60,2) into the desired position.

7.10 Lamps

- Bulbs and light fittings can be extremely hot.
- Let the bulbs and lamp holders cool down before touching them.
- When the light is switched on or is still hot, a safety distance of at least 30 cm to combustible material such as net curtains or curtains has to be maintained. Fire hazard!

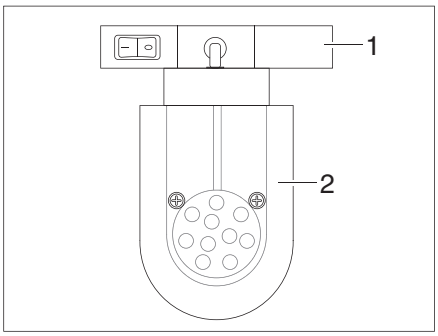

Fig. 61 Spot light (example)

Moving spotlight:

- Grasp the holder (Fig. 61,1) and turn it 45°.
- Remove the spotlight (Fig. 61,2) from the rail system.
- Insert the spotlight (Fig. 61,2) into the rail system at the desired position and turn 45°.

7 Living

7.11 Beds

7.11.1 Bunk bed

- Only use the bunk bed with the safety net or safety guard (depending on the model) in position.
- The maximum permitted bunk bed load is 100 kg.
- Never allow small children to remain in the bunk bed without supervision.
- But in particular with regard to small children less than 6 years of age, users should ensure that they cannot fall out of the bunk bed.
- Use separate children's beds or travel cots suitable for children.

Depending on the model, the vehicle is fitted with a bunk bed. The bunk bed can be used immediately, without additional conversion.

Always use the provided access aid to climb up to the upper bed.

7.11.2 Bunk bed, folding

- The maximum permitted bunk bed load is 100 kg.
- Never allow small children to remain in the bunk bed without supervision.
- But in particular with regard to small children less than 6 years of age, users should ensure that they cannot fall out of the bunk bed.
- Use separate children's beds or travel cots suitable for children.
- When the bunk bed is folded up, secure it with the retaining belt (Fig. 62,1). There is a risk of injury!

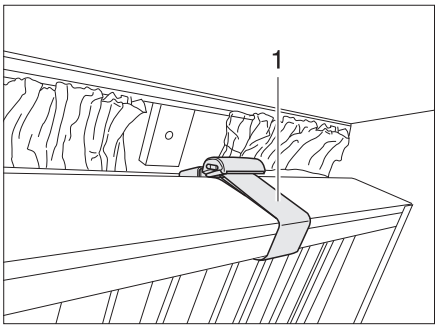

Fig. 62 Bunk bed, folding

Depending on the model, the vehicle is fitted with a folding bunk bed. When the bunk bed is folded down, it can be used immediately without any additional conversion.

The bunk beds can be folded up and secured with the retaining belt (Fig. 62,1). The space under the bed can be used for storage.

7.11.3 Fixed bed (gas pressure spring)

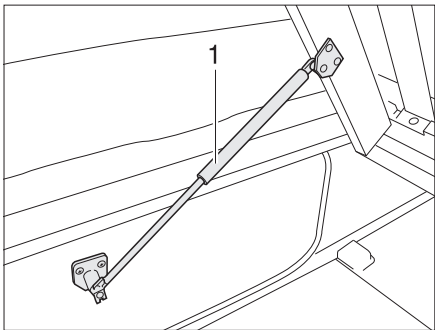

Fig. 63 Fixed bed

A storage compartment is underneath the bed. Lift up the slatted frame from the vehicle inside to place items in the storage compartment or to empty it.

Opening:

- Lift the mattress forwards and set it down on the panel.
- Lift slatted frame. The gas-pressure springs (Fig. 63,1) hold the slatted frame open.

Closing:

- Press the slatted frame downwards against the resistance of the gas-pressure springs.
- If necessary, push the mattress behind the panel.

7 Living

7.12 Converting seating groups for sleeping

▷ In the event of an accident, emergency braking or on uneven road surfaces, additional cushions with reinforced undersides can be thrown through the vehicle and damage parts of the equipment. Before setting off, stow the additional cushions safely away or secure them with the straps provided for that purpose.

7.12.1 Bench seating group and side seating group

▷ Depending on the model, the seating group can be slightly different in shape and position to the one shown here.

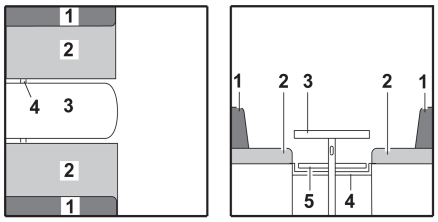

1 Back cushion
2 Seat cushion
3 Table
4 Bar
5 Mounting rail

Fig. 64 Prior to conversion

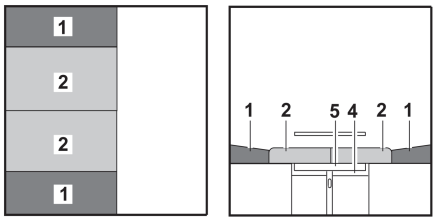

Fig. 65 After conversion

- Convert the table (Fig. 64,3) to a bed foundation (see Section 7.8).
- Insert the bar (Fig. 64,4) or pull it to the middle. The bar is correctly positioned if it supports the table-top directly behind the table leg.
- Pull the seat cushions (Fig. 65,2) into the centre.
- Insert the back cushions (Fig. 65,1) between the seat cushions and the wall.

▷ Depending on the model, an enclosed additional cushion must be inserted between the seat cushions.
▷ In individual vehicles 1 back cushion has to be replaced by 1 additional cushion.

7.12.2 Round seating group with round table

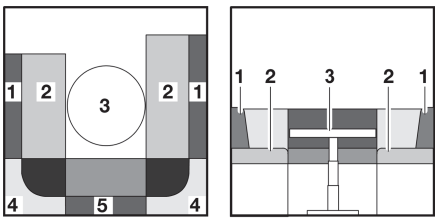

1 Back cushion
2 Seat cushion
3 Table
4 Back cushion
5 Back cushion
6 Additional cushion

Fig. 66 Prior to conversion

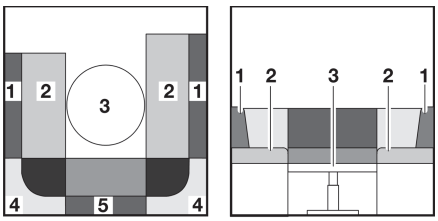

Fig. 67 During conversion

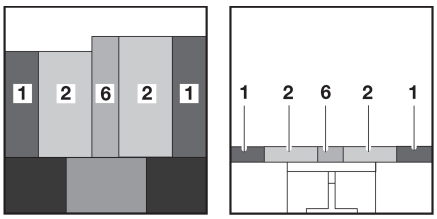

Fig. 68 After conversion

- Convert the table (Fig. 66,3) to a bed foundation (see Section 7.8).
- Remove the back cushions (Fig. 67,1, 4 and 5).
- Pull the seat cushions (Fig. 68,2) into the centre.
- Insert the back cushions (Fig. 68,1) between the seat cushions (Fig. 68,2) and the exterior wall.
- Insert the additional cushion (Fig. 68,6) between the seat cushions (Fig. 68,2) on the table (Fig. 67,3).

▷ The additional cushion (Fig. 68,6) may not be required depending on the vehicle width.

7.12.3 Rear seating group

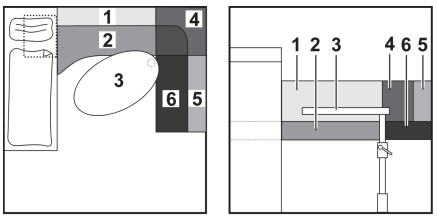

1 Back cushion
2 Seat cushion
3 Table
4 Back cushion
5 Back cushion
6 Seat cushion
7 Bed rod
8 Additional board
9 Additional cushion

Fig. 69 Prior to conversion

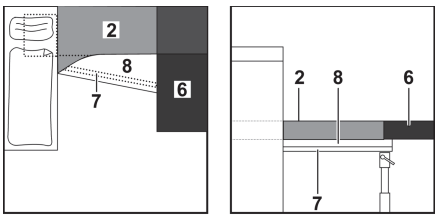

Fig. 70 During conversion

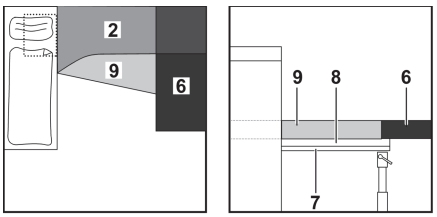

Fig. 71 After conversion

- Dismantle the table (Fig. 69,3) (see Section 7.8).
- Remove the back cushions (Fig. 69,1, 4 and 5) and lay them aside.
- Attach the bed rod (Fig. 70,7) and push it backwards as far as possible.
- Lay the additional board (Fig. 70,8) on the bed rod and the bedding boxes.
- Place the additional cushion (Fig. 71,9) on the additional board (Fig. 71,8).

7.12.4 Widening the bed into a playing area

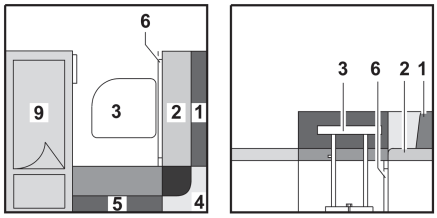

1 Back cushion
2 Seat cushion
3 Table
4 Back cushion
5 Back cushion
6 Bedding box extension
7 Additional board
8 Additional cushion
9 Bed

Fig. 72 Prior to conversion

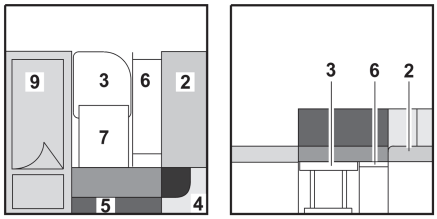

Fig. 73 During conversion

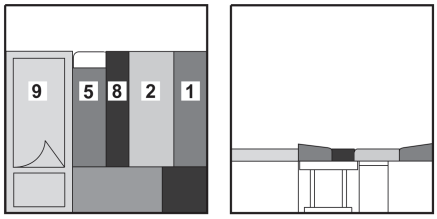

Fig. 74 After conversion

- Convert the table (Fig. 72,3) to a bed foundation (see Section 7.8).
- Turn table one quarter turn in a clockwise direction and pull forwards to the right.
- Pull out the bedding box extension (Fig. 72,6).
- Lay the additional board (Fig. 73,7) on the bed rod and the bedding boxes.
- Remove the back cushions (Fig. 72,1 and 4).
- Lay the seat cushions (Fig. 73,2) on the bedding box extension (Fig. 73,6).
- Place the back cushion (Fig. 74,1) between the seat cushion (Fig. 74,2) and the wall.
- Place the additional cushion (Fig. 74,8) next to the seat cushion.
- Insert the back cushion (Fig. 74,5) between the additional cushion and the bed (Fig. 74,9).

7 Living

7.13 Sleeping area partition

Depending on the model the sleeping area in the rear can be partitioned by a folding door or by a sliding door.

▷ Sliding doors or folding doors can bang shut uncontrolled while travelling. Material damage can occur. Before commencing the journey open the sleeping area partition and secure it with the securing strap.

7.13.1 Sliding door

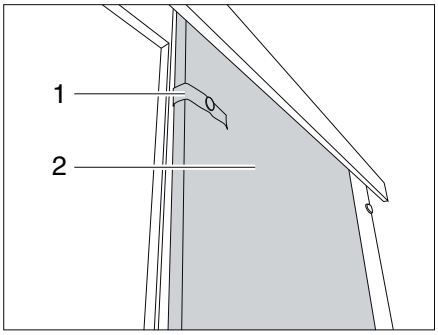

Fig. 75 Sliding door

Closing the sliding door:

- Release the securing strap (Fig. 75,1).
- Pull the sliding door (Fig. 75,2) into the closing position.

Opening the sliding door:

- Push the sliding door (Fig. 75,2) into the open position.
- Secure the sliding door with the securing strap (Fig. 75,1).

7.13.2 Folding door

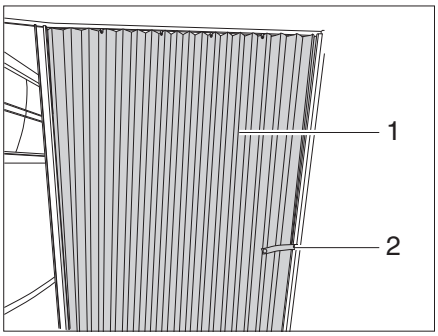

Fig. 76 Folding door

Closing the folding door:

- Release the securing strap (Fig. 76,2).
- Pull the folding door (Fig. 76,1) into the closing position.

Opening the folding door:

- Push the folding door (Fig. 76,1) into the open position.
- Secure the folding door with the securing strap (Fig. 76,2).

7 Living

8 Gas system

Chapter overview

This chapter contains instructions regarding the gas system of the vehicle.

The instructions address the following topics:

- safety
- gas consumption
- changing the gas bottles
- gas isolator taps
- external gas connection
- automatic switching facility

The operation of the gas operation appliances of the vehicle is described in Chapter 10.

8.1 General

- Before starting the journey, when leaving the vehicle or when gas equipment is not in use, close all gas isolator taps and the main isolator tap on the gas bottle.
- No appliance (e.g. heating or refrigerator) that is operated with an open flame may be operational while fuel is being filled up, on ferries or in the garage. Danger of explosion!
- If an appliance is operated with an open flame, do not start the appliance up in closed areas (e.g. garages). Danger of poisoning and suffocation!
- Have the gas system serviced, repaired or altered by an authorised workshop only.
- Have the gas system checked by an authorised specialist workshop before starting up and according to the national regulations. This also applies for not registered vehicles. For modifications to the gas system have the gas system immediately checked by an authorised specialist workshop.
- The gas pressure regulator and the exhaust gas pipes also have to be checked. The gas pressure regulator has to be replaced at least every 10 years. The vehicle owner is responsible for seeing that this is carried out.
- In case of a defect of the gas system (gas odour, high gas consumption) there is danger of explosion! Close the regulator tap on the gas bottle immediately. Open doors and windows and ventilate well.
- In case of a defect in the gas system: Do not smoke; do not ignite any open flames, and do not operate electric switches (light switches etc.).
- Before using the cooker make sure that there is sufficient ventilation. Open windows or the skylight.
- Do not use the gas cooker or gas oven for heating purposes.
- If there are several gas devices, each gas device must have its own gas isolator tap. If individual gas devices are not in use, close the respective gas isolator tap.
- Ignition safety valves must close within 1 minute after the gas flame has extinguished. A clicking sound is audible. Check function from time to time.
- The installed gas appliances are designed for use solely with propane or butane gas or a mixture of both. The gas pressure regulator as well as all installed gas devices are set for a gas pressure of 30 mbar.
- Propane gas is capable of gasification up to -42 °C, whereas butane gas gasifies at 0 °C. Below these temperatures no gas pressure is available. Butane gas is unsuitable for use in winter.

8 Gas system

- Regularly inspect the gas tube fitted to the gas bottle connection for tightness. The gas tube must not have any tears and must not be porous. Have the gas tube replaced by an authorised specialist workshop no later than 10 years after the manufacturing date. The operator of the gas system must see to it that the parts are replaced.
- Due to its function and construction, the gas bottle compartment is a space which is open to the exterior. Never cover or block the standard forced ventilation. Otherwise leaking gas cannot be dispersed to the outside.
- Do not use the gas bottle compartment as storage space as it is not moisture-proof.
- Secure the gas bottle compartment in order to prevent unauthorised persons opening it. To do so lock the access.
- The regulator tap on the gas bottle must be accessible.
- Only connect gas-operated devices (e.g. gas grill) which have been designed for a gas pressure of 30 mbar.
- The exhaust gas pipe must be fitted tightly to the heating system and to the vent and must be sealed. The exhaust gas pipe must not show any evidence of damage.
- Exhaust fumes must be able to escape into the atmosphere unhindered and fresh air must be able to enter unhindered. Therefore keep the waste gas vents and intake openings clean and free (e.g. of snow and ice). No snow walls or aprons may be allowed to lie against the vehicle.

8.2 Gas bottles

- Gas bottles are only to be transported within the designated gas bottle compartment.
- Place gas bottles vertically in the gas bottle compartment.
- Tie down gas bottles so that they are unable to turn or tilt.
- If the gas bottles are not connected to the gas tube, always place the protective cap on top.
- Close the regulator tap on the gas bottle before the gas pressure regulator or gas tube are removed from the gas bottle.
- Use your hands only to connect the gas pressure regulator or the gas tube to the gas bottles. Do not use any tools.
- Only use special gas pressure regulators with a safety valve designed for vehicle use. Other gas pressure regulators are not permitted and cannot meet the demanding requirements.
- Use the defroster (Eis-Ex) for the gas pressure regulator at temperatures below 5 °C.
- Use only 11 kg or 5 kg gas bottles. Camping gas bottles with a built-in reflux valve (blue bottle with max. 2.5 or 3 kg content) are permitted in exceptional cases with a safety valve.
- Use the shortest possible tube lengths (150 cm max.) for external gas bottles.
- Never block the ventilation openings in the floor under the gas bottles.

8 Gas system

- ▷ Screwed connections on the gas pressure regulator have left-handed threads.
- ▷ For gas-operated units the gas pressure must be reduced to 30 mbar.
- ▷ Connect gas pressure regulator complete with safety valve directly to bottle valve.

  The gas pressure regulator reduces the gas pressure in the gas bottle down to the operating pressure of the gas devices.
- ▷ For filling and connecting the gas bottles in Europe the accessories shops have corresponding Euro filling sets and Euro bottle sets.
- ▷ Information is available at the dealers and service centres.
- ▷ For information on the gas supply in Europe see Chapter 18.

8.3 Gas consumption

- ▷ The data about gas consumption of the individual gas devices is only standard average values.

Appliances	Gas consumption in grams/hour
Heater	Approx. 170 - 490 g/h
Cooker, per cooker	Approx. 140 - 165 g/h
Refrigerator	Approx. 18 g/h

Example A full 11 kg gas bottle is sufficient to:

- Cook for 3 days using one flame,
- Heat for 22 hours on full output or
- Cool for 25 days.

8 Gas system

8.4 Changing gas bottles

- When changing gas bottles, do not smoke or create any open fire.
- When you have changed the gas bottle, check whether gas escapes at the connection points and unions. Use a leakage search spray to spray the relevant connection point or union. These agents are available at the accessories shop.

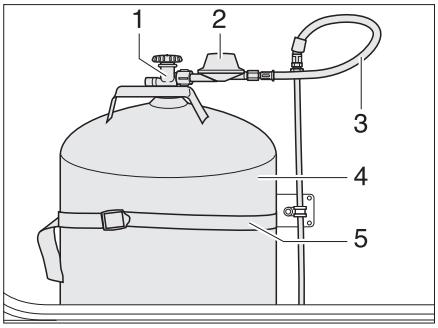

Fig. 77 Gas bottle compartment

- Open external gas bottle compartment (see Chapter 7).
- Close the regulator tap (Fig. 77,1) on the gas bottle (Fig. 77,4). Pay attention to the direction of the arrow.
- Unscrew the gas pressure regulator (Fig. 77,3) with the gas tube (Fig. 77,5) from the gas bottle by hand (left-handed thread).
- Release the fixing belts (Fig. 77,2) and take out the gas bottle.
- Place a filled gas bottle in the gas bottle compartment.
- Fix gas bottle in place with the fixing belts.
- Screw gas pressure regulator and gas tube manually onto gas bottle (left-handed thread).

8.5 Gas isolator taps

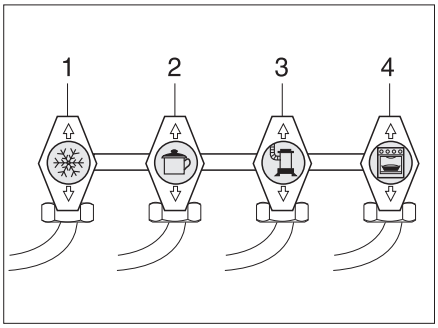

1 Refrigerator
2 Cooker
3 Heater/boiler
4 Oven

Fig. 78 Symbols for the gas isolator taps

A gas isolator tap (Fig. 78) for every gas device is built into the vehicle.

The gas isolator taps are located under the cooker or in the vicinity of the gas devices (e.g. in the bench seat).

8 Gas system

8.6 External gas connection

- Always close the gas isolator tap when the external gas connection is not being used.
- Only gas appliances with a suitable adapter should be connected to the external gas connection.
- Connect only external gas appliances which are designed for an operation pressure of 30 mbar.
- Ensure that gas does not escape at the connection point after connecting and after the gas isolator tap has been opened. If there is a leak in the external gas connection, gas will escape into the open air. Immediately close the gas isolator tap and the main regulator tap on the gas bottle. Have the external gas connection checked by an authorised specialist workshop.
- When connecting an external gas appliance, make sure that there is nothing near the external gas connection that could cause a spark.
- Do not use the external gas connection to fill gas bottles. Observe the information stickers on the external gas connection.

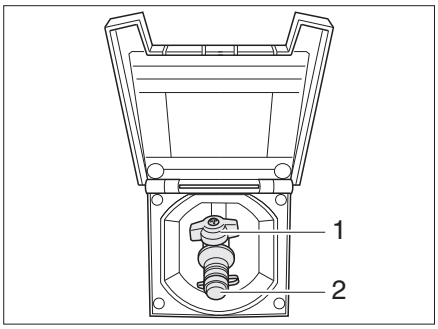

Fig. 79 External gas connection, gas isolator tap closed

The external gas connection (Fig. 79) is located at the rear or to the left or right of the vehicle depending on the model.

- Connect the external gas device to the connection point (Fig. 79,2).
- Open the gas isolator tap (Fig. 79,1).

8 Gas system

8.7 DuoControl CS switching facility

- Do not use the switching facility in closed spaces.
- During the journey the gas system may only be operated with a crash sensor and suitable high-pressure hoses with hose break guard. Danger of explosion!

- ▷ If the vehicle is equipped with a panel of the DT series and the switching facility is operated via this panel, the operating unit is not required.
- ▷ Additionally observe the manufacturer's instruction manual.

The DuoControl is an automatic switching facility with a remote display for a two-bottle gas system. The DuoControl switching facility automatically switches gas supply from the primary bottle to the reserve bottle as soon as the primary bottle is either empty or no longer ready for operation. The gas appliances may still continue operation. The DuoControl switching facility is suitable for all commercial gas bottles from 3 kg to 33 kg.

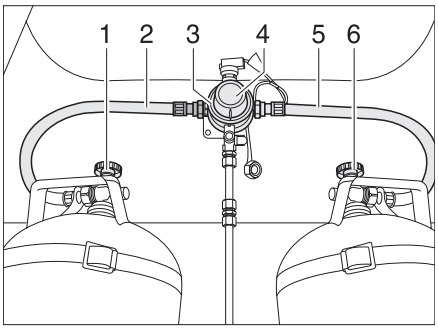

Fig. 80 DuoControl switching facility

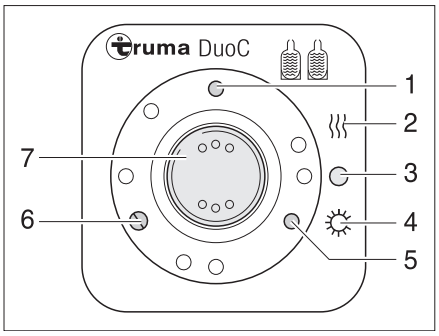

Fig. 81 Operating unit

Construction of the unit

The DuoControl switching facility consists of a switching valve (Fig. 80,3) and the operating unit (Fig. 81). The switching valve is mounted between the gas tubes (Fig. 80,2 and 5). The knob (Fig. 80,4) on the switching valve is used to select which of the gas bottles is to be used as a primary bottle and which is to be used as a reserve bottle.

The switching valve is equipped with the regulator defroster "EisEx". This prevents damage to the gas system during the winter months.

Only the electrical functions can be switched at the operating unit (Fig. 81). The regulator taps on the gas bottles (Fig. 80,1 and 6) must be opened manually.

The switching valve provides a constant gas pressure, regardless of which gas bottle is being drawn upon. The two indicator lamps on the operating unit show the filling level of the primary bottle. The primary bottle is full when the green indicator lamp (Fig. 81,6) lights up. The primary bottle is empty when the red indicator lamp (Fig. 81,5) lights up. The gas is then supplied via the reserve bottle.

8 Gas system

Operating modes

The DuoControl switching facility has two operating modes:

- Winter operation "On and heating"
- Summer operation "On"

Putting into operation:

- Open the regulator taps on the gas bottles (Fig. 80,1 and 6).
- Use the knob (Fig. 80,4) on the switching valve (Fig. 80,3) to select the gas bottle which is to be the primary source of gas (primary bottle).
  Always turn the knob as far as it will go.
- Switch on the DuoControl switching facility at the operating unit (Fig. 81).
  To do so, set the rocker switch (Fig. 81,7) to winter operation "On and heating" (Fig. 81,2) or to summer operation "On" (Fig. 81,4). The switching valve is now vented. The yellow indicator lamp (Fig. 81,1) lights up when winter operation has been selected and the regulator defroster is switched on.

Switching off:

- Set the rocker switch (Fig. 81,7) to "O" (Fig. 81,3). The yellow indicator lamp (Fig. 81,1) goes out.
- Close the regulator taps on the gas bottles (Fig. 80,1 and 6).

Remote display

The indicator lamps on the operating unit (Fig. 81,5 and 6) indicate in the vehicle interior whether the primary bottle is ready for operation.

Changing gas bottles

If the green indicator lamp (Fig. 81,6) goes out during operation and the red indicator lamp (Fig. 81,5) lights up, the gas bottle selected as the primary bottle is empty and has to be changed. The reserve bottle continues supplying the gas appliances with gas.

▶ When changing gas bottles, do not smoke or create any open fire.

Changing gas bottles:

- Close the regulator tap on the empty gas bottle.
- Unscrew the gas tube from the gas bottle.
- Connect the full gas bottle to the gas tube.
- Open the regulator tap on the gas bottle.
- Set the knob on the switching valve with half a turn, so that the newly replaced gas bottle will serve as a reserve bottle.
- Press the button for the hose break guard at the high-pressure hose to activate it.
- If necessary, press the reset button at the crash sensor.

8 Gas system

Crash sensor

The crash sensor protects against unwanted gas discharge. In the event of an accident (above an impact speed of approx. 15 km/h) or an excess inclination of the vehicle the gas supply will automatically be interrupted.

- ▷ Only if the vehicle is equipped with a crash sensor and suitable high-pressure hoses with hose break guard, may the living area heater be operated during the journey.
- ▷ Additionally observe the manufacturer's instruction manual.

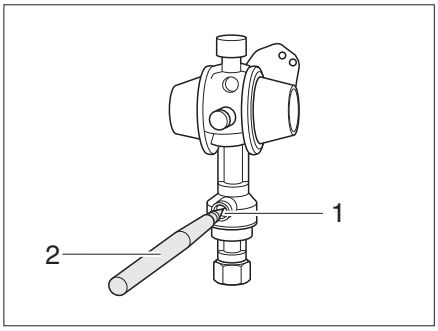

Fig. 82 Crash sensor

If the crash sensor was triggered, it must be released manually.

Releasing:

- ■ Press in the release button (Fig. 82,1) with a pin (Fig. 82,2) for several seconds.

Hose break guard

The hose break guard protects against gas escaping in case of a defect or the high-pressure hose tearing off.

- ▷ Use a suitable high-pressure hose with hose break guard and country-specific connection for gas bottles.

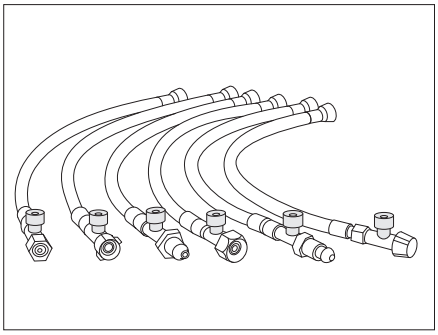

Fig. 83 High-pressure hoses with hose break guard (country-specific variants)

The hose break guard has to be activated after the gas bottle has been replaced.

Activating:

- ■ Firmly press the green button at the high-pressure hose (Fig. 83).

9 Electrical system

Chapter overview

This chapter contains instructions regarding the electrical system of the caravan.

The instructions address the following topics:

- safety
- explanations of terms relating to the battery
- 12 V power supply
- living area battery
- charging the living area battery
- power pack
- transformer/rectifier
- panel
- 240 V power supply
- connection to the 240 V power supply
- fuse rating
- towing vehicle connection

The operation of the electrical appliances of the housing body is described in Chapter 10.

9.1 General safety instructions

▶ Only allow qualified personnel to work on the electrical system.

The vehicle is a safe place during a storm (Faraday cage). However, to protect the electrical devices, disconnect the 240 V connection and retract the antennae as a precaution.

9.2 Terms

Off-load voltage

The off-load voltage is the voltage of the battery in idle condition, i.e. no current is consumed and the battery is not being charged.

Closed circuit current

Some electrical appliances, such as the clock and the indicator lamps, require continuous electric current, for this reason they are referred to as inactive appliances. This closed circuit current flows even if the 12 V power supply has been switched off.

Total discharge

Total discharge of the battery is imminent, if a battery is completely discharged by an active appliance and by closed circuit current.

▷ Total discharge damages the battery.

Capacity

Capacity refers to the amount of electricity which can be stored in a battery.

The capacity of a battery is given in ampere hours (Ah). If a battery possesses a capacity of 80 Ah, then the battery can dispense a current of 1 A for 80 hours or a current of 2 A for 40 hours.

External influences such as temperature may alter the storage capacity of the battery.

9 Electrical system

9.3 12 V power supply

- If you use the battery of the towing vehicle to provide power for the caravan, bear in mind that the battery capacity is restricted. If you place too great a burden on the battery, this may lead to starting difficulties.
- Always disconnect the electrical connection between the towing vehicle and the caravan before the caravan is connected to the local power supply. In order to carry this out, disconnect the plug from towing vehicle socket.
- Always disconnect the electrical connection between the towing vehicle and the caravan before the living area battery is charged via an external charger.

When the caravan is not connected to the 240 V power supply, 12 V power supply is performed either by the starter battery of the connected towing vehicle or by the living area battery (Autark Package).
When the caravan is electrically connected to the towing vehicle and the vehicle engine is running, the living area battery is charged by the vehicle generator.

The 12 V power supply can be cut off with the 12 V main switch on the panel (special equipment).

- To make the living area's electrical installation completely deenergised, pull out the plug from the battery input "Batterie-Eingang" at the transformer/rectifier.

9.3.1 Living area battery, general (Autark Package)

- When changing the living area battery, use only batteries which meet the minimum capacity of the charger. Observe the separate instruction manual for the charger. Lower-capacity batteries will generate a great deal of heat when they are charged. Danger of explosion!
- Devices with a maximum of 10 A can be connected to the sockets of the 12 V power supply. Fire hazard!

- Use the charger module provided on the transformer/rectifier to charge the living area battery. When charging externally, use a regulated charger that is suitable for the battery type (a lead acid or dryfill battery) and the capacity of the living area battery.
- Prior to commencing a journey ensure the living area battery is fully charged. For this reason charge the battery for at least 24 hours before commencing the journey.
- During the trip, use every opportunity to charge the living area battery.
- Charge the living area battery for at least 24 hours after the journey.
- Before a temporary lay-up charge the battery for at least 24 hours, for longer standstills 48 hours.
- For long periods of inactivity (4 weeks or more), either disconnect the living area battery or recharge it regularly (charge for 24 hours at least every 12 weeks).
- In winter store the charged battery in a place which is cool and protected from frost and recharge every 12 weeks.
- When the living area battery is changed, only use batteries of the same type.
- Before disconnecting or connecting the terminals of the living area battery, switch off the engine of the towing vehicle as well as the 240 V and 12 V power supplies and all appliances. Danger of short circuit!

9 Electrical system

- When the living area battery is disconnected and the caravan and the towing vehicle are connected electrically, do not use the ignition of the towing vehicle. Danger of short circuit!
- Take note of the battery manufacturer's users and maintenance instructions.

- The battery is maintenance-free. Maintenance-free means:

  It is not necessary to check the acid level.

  It is not necessary to lubricate the battery poles.

  It is not necessary to refill the distilled water.

  Even a maintenance-free battery must be charged regularly.

When the vehicle is not connected to the 240 V power supply or the 240 V power supply is switched off, the living area battery supplies the living area with 12 VDC. The living area battery has a limited power supply only. For this reason, electrical appliances such as the radio and the lights should not be operated for a long time without using the 240 V power supply.

If the vehicle is connected to the 240 V power supply, the living area battery is automatically recharged by the charger installed in the transformer/rectifier (Autark Package).

Discharging

The living area battery is discharged by the closed circuit current which some electrical appliances continuously require. Appliances such as the charger, solar charge regulator, panel etc. consume approx. 20 mA to 65 mA of electricity from the battery capacity, even when the 12 V main switch is turned off.

- Total discharge damages the battery.
- Recharge the battery in good time.

At lower outdoor temperatures the battery loses its capacity.

The self-discharge rate of the battery is also dependant on temperature.
At 20 to 25 °C the self-discharge rate amounts to approx. 3% of the capacity per month. The self-discharge rate will increase with rising temperatures: At 35 °C the self-discharge rate amounts to approx. 20% of the capacity per month.

An older battery no longer has the complete capacity available.

The higher the number of active electrical appliances, the faster the energy of the living area battery is consumed.

In order to prevent fast discharge of the living area battery, the refrigerator is operated on 12 V power supply only when the engine is running and when there is an electrical connection between the towing vehicle and caravan.

- Further information can be obtained in the separate documents of the living area battery.

9.3.2 Check the living area battery (Autark Package)

The capacity of a battery is limited as to time. The higher the number of electrical appliances, the faster the energy of the living area battery is consumed. A battery which has been installed for years has no longer the complete capacity available.

Charging condition

To protect the living area battery, no more than 80% of the battery's capacity should be drawn. Therefore check the charging condition of the living area battery regularly. The charging condition of the living area battery can be read off on the panel.

▷ A meaningful measurement of the charging condition can only be made after 4 hours of battery charging. Immediately after charging, the battery voltage is higher, after approx. 4 hours, it sinks to the so-called off-load voltage. The off-load voltage displays the charging condition.

Off-load voltage (measured at the poles)		Charging condition
Higher than	12,80 V	100%
Approx.	12.55 V	75%
Approx.	12.32 V	50%
Approx.	12.18 V	25%
Lower than	12.00 V	0%

Energy reserves

The living area battery has a limited power supply only. That is why electrical appliances should not be operated over a long period of time if the vehicle is not connected to the 240 V power supply or the engine of the towing vehicle is switched off.

9.3.3 Charging the living area battery (Autark Package)

- The acid in the battery is poisonous and corrosive. Any contact with the skin or the eyes is to be avoided.
- In the case of charging with an external charger there is danger of explosion. Only charge the battery in a well ventilated area and away from naked flames or possible sources of sparks.
- Always remove the living area battery from the vehicle when charging it using an external charger.

▷ Do not connect the battery cables to the wrong poles.

▷ When the living area battery is disconnected and the caravan and the towing vehicle are connected electrically, do not use the ignition of the towing vehicle. Danger of short circuit!

▷ Before disconnecting or connecting the terminals of the living area battery, switch off the engine of the towing vehicle as well as the 240 V and 12 V power supplies and all appliances. Danger of short circuit!

▷ Before charging the battery, check whether the external charger is approved for the battery type.

▷ Observe the instruction manual for the charger.

▷ Irreparable damage to the living area battery will result if it is overcharged.

9 Electrical system

Charging using a 240 V power supply

If the vehicle is connected to the 240 V power supply, the living area battery is recharged by the installed charger. The charging current is adapted to suit the charging condition of the battery. This ensures that it is not possible to overload the battery.

To make use of the maximum output from the charger module on the transformer/rectifier, switch off all electrical appliances during charging.

Charging using the vehicle engine of the towing vehicle

When the engine of the towing vehicle is running, the vehicle generator charges the living area battery. An electrical connection between the towing vehicle and the caravan is prerequisite for this. If the engine of the towing vehicle is switched off, the electrical connection is automatically disconnected by a relay. This prevents the battery of the towing vehicle from being run down by electrical appliances in the living area. The starting capability of the towing vehicle is thus preserved.

Charging with an external charger

When charging the living area battery with an external charger, proceed as follows:

- Disconnect the caravan electrically from the towing vehicle.
- Switch off the 12 V main switch on the panel. The indicator lamp goes out.
- Disconnect the mains plug from the transformer/rectifier.
- Switch off all gas appliances, all gas isolator taps and close the regulator tap on the gas bottle.
- There is a danger of short circuit when disconnecting the battery poles. For this reason, first disconnect the negative pole on the living area battery and then the positive.
- Remove the living area battery from the vehicle.
- If the vehicle is equipped with a dryfill battery, Check whether the external charger is approved for the dryfill battery.
- Check that the external charger is turned off.
- Connect the external charger to the living area battery. Pay attention to the polarity: First connect the positive terminal "+" to the positive pole of the battery, then connect the negative terminal "–" to the negative pole of the battery.
- Switch on the external charger.
- See the instructions for use of the connected charger for information concerning charge period required for the battery.
- See the specifications on the battery for information concerning its strength.
- Disconnect the external charger in reverse order.

9 Electrical system

9.4 Power pack

▷ When the ignition is switched off and there is no connection to the 240 V power supply, the battery of the towing vehicle is discharged by consumers such as the refrigerator or the living are lamps (exception: Power Pack SE). The starting capability of the towing vehicle can be impaired.

▷ The towing vehicle battery is not charged by the power pack.

The power pack is usually installed in the wardrobe.

If the vehicle is **not** connected to the 240 V power supply, the requisite power supply is provided by the battery of the towing vehicle, as long as contact 9 "Constant positive" is connected to the towing vehicle socket (see connection diagram at the end of this chapter). The 12 V living area lamps, the cassette toilet and the water pump can be used.

If the vehicle is connected to the 240 V power supply, the power pack switches the power supply in the living area automatically from the towing vehicle battery to mains operation. For Dometic type I the power pack must also be turned on.

Switched-mode power supply

The power pack (Fig. 84,3) is mounted next to the 240 V automatic circuit breaker (Fig. 84,2).

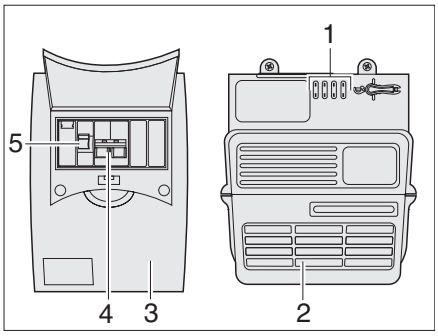

Fig. 84 Power pack and automatic circuit breaker

A main switch (Fig. 84,5) and a residual current circuit-breaker (Fig. 84,4) are integrated in the power pack. The automatic circuit breaker contains several fuses (Fig. 84,1).

The residual current circuit-breaker (Fig. 84,4) measures the current flow of the current deed and return lines. If the two lines are equivalent, the residual-current circuit-breaker does not become active. If there is a difference between the lines the breaker interrupts the current flow immediately. This prevents dangerous electrical accidents.

Switching on:

■ Switch the main switch (Fig. 84,5) downwards to the "ON" position.

9 Electrical system

9.5 Transformer/rectifier EBL 109 (Autark Package)

▷ Do not cover the ventilation slots. Danger of overheating!

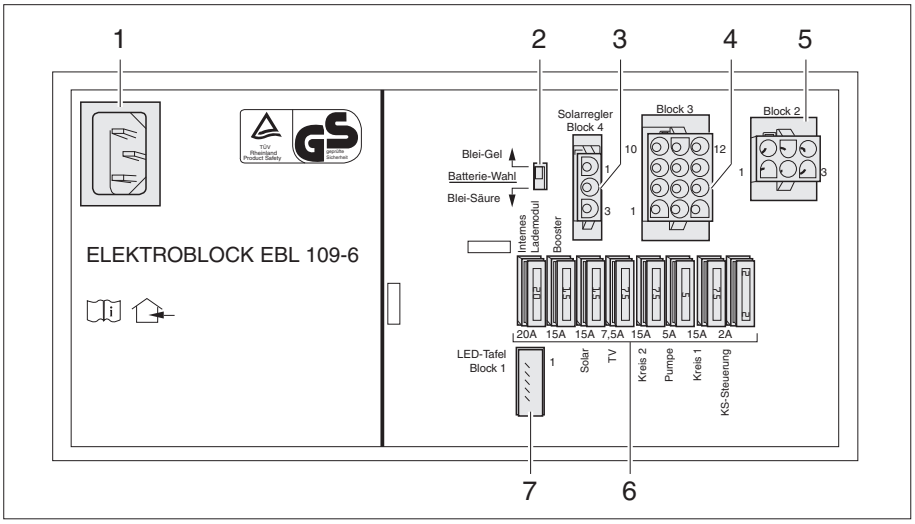

Fig. 85 Transformer/rectifier EBL 109

1 Main supply socket 240 V~
2 Battery selector switch, lead acid/dryfill option
3 Input: Solar charge regulator
4 Output: Consumer circuit 1 and 2, water pump, TV, input solar cells
5 Input: Living area battery, vehicle battery, alternator D+, battery detector living area battery, minus (earth)
6 Fuses (see "Fuse rating" table)
7 Connection panel

Functions

The transformer/rectifier has the following functions:

- The transformer/rectifier charges the living area battery.
- The transformer/rectifier distributes the current to the 12 V circuits and secures them.
- The transformer/rectifier contains connections for a solar charge regulator as well as other control and monitoring functions.
- The transformer/rectifier separates the starter battery of the towing vehicle electrically from the living area battery of the caravan if there is an electric connection between the towing vehicle and the caravan and if the vehicle engine is turned off. In this way the 12 V appliances of the caravan cannot discharge the starter battery of the towing vehicle.
- The transformer/rectifier distributes the current to the 12 V sockets. Devices with a maximum of 10 A can be connected to the sockets.

The transformer/rectifier only works in conjunction with a panel.

When the transformer/rectifier is subject to a heavy load, the fitted charger module reduces the charging current. This protects the charging device against overheating. The transformer/rectifier is subject to a heavy load when e.g. an empty living area battery is charged, additional electrical appliances are turned on and the ambient temperatures are high.

9 Electrical system

Location

Depending on the model, the transformer/rectifier is situated either in the bench or in the bedding box.

▷ Further information can be obtained from the separate instruction manual "Transformer/rectifier".

9.5.1 Battery selector switch

▶ If the battery selector switch is set incorrectly, oxyhydrogen gas (exploding gas) can form. Danger of explosion!

▷ Incorrect setting of the battery selector switch damages the living area battery.

▷ Do not change the factory setting of the battery selector switch.

The battery selector switch is used to set the charger module in the transformer/rectifier to the type of living area battery installed in the vehicle ("lead acid" or "dry-fill" battery).

9.5.2 Charging the battery

During driving the towing vehicle generator charges the living area battery. If the engine of the towing vehicle is switched off, the transformer/rectifier separates the starter battery of the towing vehicle from the living area battery so that discharging of the starter battery of the towing vehicle through usage of 12 V living area appliances is not possible.

When the vehicle is connected to the 240 V supply, the transformer/rectifier charges the living area battery.

▷ The power supply unit is not used to charge the starter battery of the towing vehicle.

9 Electrical system

9.6 Panel LT 109 - Power Pack SE (special equipment)

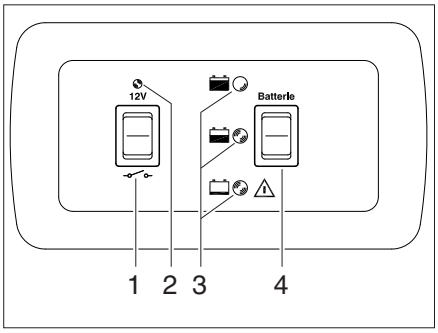

1 12 V main switch
2 12 V indicator lamp
3 Battery charging condition indicator
4 Rocker switch for battery display

Fig. 86 Panel LT 109-5

9.6.1 12 V main switch

The 12 V main switch (Fig. 86,1) switches the 12 V power supply of the living area on and off.

Switching on:

- Press the rocker switch (Fig. 86,1) upwards: The 12 V living area power supply is switched on. The 12 V indicator lamp (Fig. 86,2) lights up.

Switching off:

- Press the rocker switch (Fig. 86,1) downwards: The 12 V living area power supply is switched off. The 12 V indicator lamp (Fig. 86,2) goes off.

▷ When leaving the vehicle switch off the 12 V main switch. This prevents unnecessary discharging of the living area battery.

9.6.2 Living area battery charging condition

Use the "Battery" rocker switch (Fig. 86,4) to have the charging condition of the living area battery indicated.

Displays:

- Press the "Battery" rocker switch (Fig. 86,4): The charging condition of the living area battery is displayed.

After the rocker switch has been pressed, the red, yellow or green indicator lamp (Fig. 86,3) lights up:

LED indicator	**Battery voltage**	**Vehicle is in**		
		Battery operation	**Mobile operation**	**Power operation**
Red	< 11 V	Battery is empty. **Caution deep discharge!**	No charge or 12 V network overloaded. **Caution deep discharge!**	
Yellow	11 V to 12 V	Battery is weakly loaded or heavily drained.	Battery is being weakly charged. If for longer period (several hours): Bad charge or 12 V network overloaded.	
Green	> 12 V	Battery is fully charged.	Battery is being charged.	

9 Electrical system

▷ If the red indicator lamp flashes with the discharged battery symbol, the voltage of the living area battery lies under 11 V. In this case switch off the consumers immediately and charge the living area battery. See “Check the living area battery (Autark Package)” on page 90.

Caution! Damage to battery through deep discharging or overload!

9.7 Panel LT 222

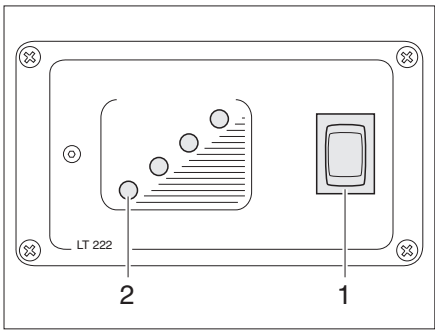

1 Rocker switch for water tank
2 Water tank indicator lamp

Fig. 87 Panel LT 222

Filling level of the tank

The filling level in the water tank can be read off on the panel (Fig. 87).

Displays:

■ Press the rocker switch (Fig. 87,1): One of the indicator lamps (Fig. 87,2) lights up.

9.8 240 V power supply

▶ Only allow qualified personnel to work on the electrical system.

The 240 V power supply provides electricity for:

- Sockets with earth contact for appliances with maximum 16 A
- Refrigerator
- 12 V living area power supply

The electrical appliances which have been connected to the 12 V power supply system of the living area are supplied with power from the living area battery (Autark Package) or the power pack.

Connect the vehicle to an external 240 V power supply system as often as possible. The charger module in the transformer/rectifier automatically charges the living area battery (Autark Package).

9 Electrical system

9.8.1 240 V connection

▶ The external 240 V power supply must be protected by fuse with a fault current protection switch (FI-switches, 30 mA).

▷ Always disconnect the electrical connection between the towing vehicle and the caravan before the caravan is connected to the local power supply. In order to carry this out, disconnect the plug from towing vehicle socket.

▷ Check whether the power supply of the local utility company is suitable for the electrical system and appliances of the caravan with regard to the dimensioning of voltage, frequency and current. In addition, the cables or lines and the connections have to be suitable.

▷ For the connection points on camp sites (camping distributors) highly sensitive fault current protection switches (FI-switches, 30 mA) are obligatory.

The vehicle can be connected to an external 240 V power supply. The cable may have a length of maximum 25 m.

9.8.2 Power cable for external 240 V connection

▶ Completely unwind the cable on cable drums to prevent overheating.
▶ Check cables/lines, plugs and connections for damage.

Power cable

- Three-core (3 x 2.5 mm^2) flexible rubber sheathed cable
- Maximum 25 m in length
- 1 plug with earth contact
- 1 socket with earth contact (connectors to EN 60309)

Connection possibilities

We recommend a CEE connection cable with CEE plug and CEE socket as the supply line. If these connection possibilities are not available, we recommend the following combination with an isolated earth plug:

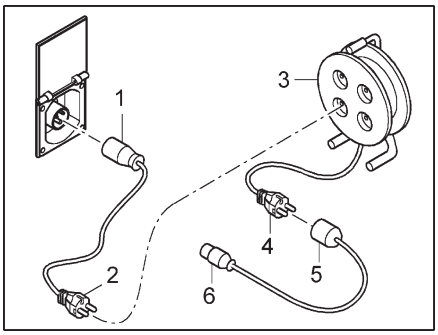

Fig. 88 Connection options for 240 V power connection

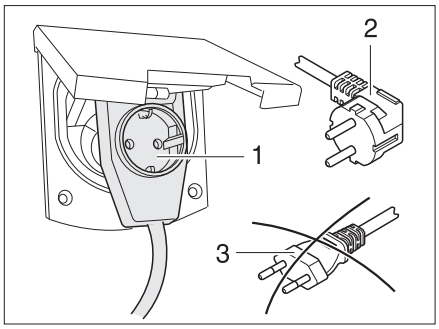

Fig. 89 Connecting an angled connector with socket

- Adapter cable:
  CEE 17 socket with earth contact (Fig. 88,1) – Plug with earth contact (Fig. 88,2)
- Cable reel:
  Socket with earth contact (Fig. 88,3) – Plug with earth contact (Fig. 88,4)
- Adapter cable:
  Socket with earth contact (Fig. 88,5) – CEE 17 plug with earth contact (Fig. 88,6)

9 Electrical system

▶ If a CEE 17 angled connector with socket mounted on rear (Fig. 89,1) is used, use only a rubberised and sealed IP 44 plug with earth contact (Fig. 89,2). Do not use a plug without earth contact (Fig. 89,3). Danger of electrocution!

Depending on the model, the flap for the 240 V connection is identified with the symbol "".

Connecting the power cable:

- Open external flap at the caravan.
- Depending on the model, fold up the cover.
- Plug in the plug.
- Plug the plug into the electrical socket of the power supply unit at the caravan site.
- Switch on the main cut-off switch at the caravan.
- Check whether the fault-current protection switch in the caravan functions by pressing the test button and switch it back on.

▶ In cases of faults or if the supply is not available or is faulty after you have carried out the procedure above, inform the caravan site operator.

▷ Depending on the model, unlock the plug before pulling it out.

Disconnecting the supply line:

- Switch off the main cut-off switch at the caravan.
- Unplug the plug at the electrical socket of the power supply unit at the caravan site.
- Remove the plug at the caravan.

9 Electrical system

9.9 Fuses

- Only replace defective fuses when the cause of the defect is known and has been remedied.
- Only replace defective fuses when the power supply is switched off.
- Never bridge or repair fuses.

9.9.1 12 V fuses

The appliances connected to the 12 V power supply in the living area are fused individually. The fuses are accessible on the power pack and on the transformer/rectifier.

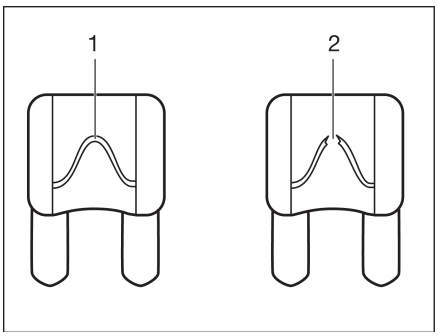

1 Unbroken fuse element
2 Broken fuse element

Fig. 90 12 V fuse

An intact 12 V fuse can be detected by the unbroken fuse element (Fig. 90,1). If the fuse element is broken (Fig. 90,2), change the fuse.

Before changing fuses, take the function, value and colour of the relevant fuses from the following specifications. When changing fuses, only use flat fuses with the values shown below.

Fuses at the living area battery (Power Pack SE)

Function	Value/colour
Cable from the living area battery to the power supply unit	40 A red
Cable from the living area battery to the power supply unit	2 A grey

Fuses on the power pack

Circuit 1	15 A blue
Circuit 2	15 A blue
Circuit 3	10 A red
Circuit 4	7,5 A brown

Fuses on the transformer/rectifier EBL 109 (Power Pack SE)

Internal charger	20 A yellow
Booster	15 A blue
Solar	15 A blue
TV	7,5 A brown
Circuit 2	15 A blue

9 Electrical system

Function	Value/colour
Water pump	5 A light brown
Circuit 1	15 A blue
Refrigerator control	2 A grey

Fuse for the Thetford toilet (swivel toilet)

The fuse is located in the locker wall of the Thetford cassette.

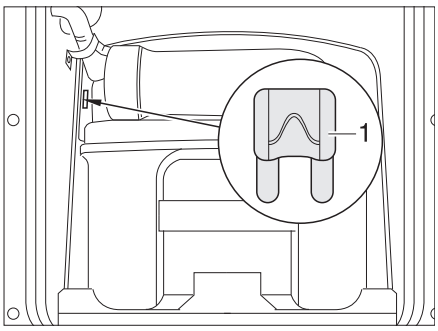

1 Flat fuse 3 A/purple

Fig. 91 Fuse for the Thetford toilet

Changing:

- Open the flap for the Thetford cassette on the outside of the vehicle.
- Pull out the Thetford cassette completely.
- Replace fuse (Fig. 91,1).

Fuse for the Thetford toilet (fixed seat)

The fuse is located in the locker wall of the Thetford cassette.

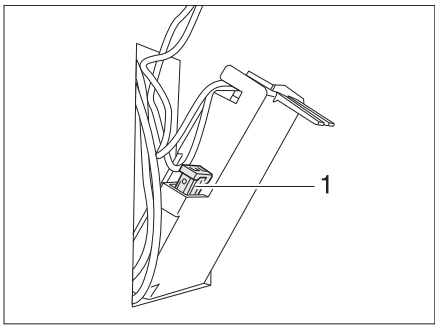

1 Flat fuse 3 A/purple

Fig. 92 Fuse for the Thetford toilet

Changing:

- Open the flap for the Thetford cassette on the outside of the vehicle.
- Remove the Thetford cassette and swing out the flap in the housing panel.
- Replace the fuse (Fig. 92,1).

9.9.2 240 V fuse

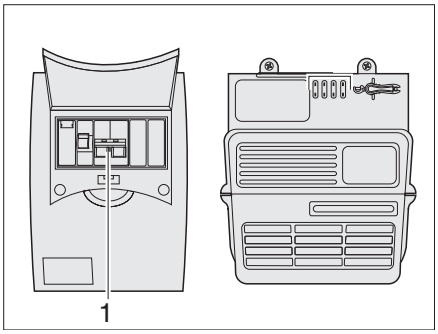

Fig. 93 Residual current circuit-breaker

A residual current circuit-breaker (Fig. 93,1) secures the 240 V power supply.

The residual current circuit-beaker is integrated in the power pack.

9.10 Connection to the towing vehicle

9.10.1 Thirteen-pin plug connection diagram

- ▷ Note the colours of the connecting cables which are fitted to the socket of the towing vehicle. This makes any new connection which may be necessary easier.
- ▷ To connect the thirteen-pin plug with a seven-pin socket, use an adaptor (commercially available).

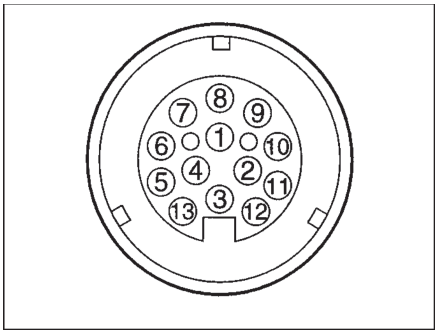

Fig. 94 Top view on socket towing vehicle (thirteen-pin system Jaeger to DIN EN 1648-1)

Connection diagram

Contact number	DIN-specification	Function	Cable colour	Cross section of the wire
1	L	Left direction indicator	Yellow	1.5 mm^2
2	54 G	Fog tail light	Blue	1.5 mm^2
3 [1)]	31	Earth (contacts 1, 2, 4 - 8)	White	2.5 mm^2
4	R	Right direction indicator	Green	1.5 mm^2
5	58 R	Right tail light, side marker light, clearance light, marker light, licence plate light	Brown	1.5 mm^2
6	54	Brake lights	Red	1.5 mm^2

9 Electrical system

Contact number	DIN-specification	Function	Cable colour	Cross section of the wire
7	58 L	Left tail light, side marker light, clearance light, marker light, licence plate light	Black	1.5 mm^2
8		Reverse lamp and/or reverse equipment for overrun brake	Pink	1.5 mm^2
9		Power supply (constant positive): Light, water pump, charging line of transformer/rectifier (only for Power Pack SE). Refrigerator, control line via power pack (without Power Pack SE), ATC with relay.	Orange	2.5 mm^2
10		Power supply (controlled by the ignition switch): Control booster in the transformer/rectifier (only for Power Pack SE) D+, refrigerator	Grey	2.5 mm^2
11 [1)]		Earth (contact 10)	White black	2.5 mm^2
12		Not assigned	White blue	1.5 mm^2
13 [1)]		Earth (contact 9)	White red	2.5 mm^2

[1)] These earth cables may not be connected to electrical conductors on the trailer side.

▷ Contact number 12 is not assigned at the factory.

9.10.2 Towing vehicle installation (recommendation)

- ▷ The towing vehicle must be retrofitted with the corresponding cable cross sections and a relay for the power supply (controlled using the ignition) (see Fig. 95).
- ▷ If the cable cross sections stipulated below are not adhered to, then it is possible that a correct charging of the living area battery and the 12 V function of the refrigerator during the journey is not possible.

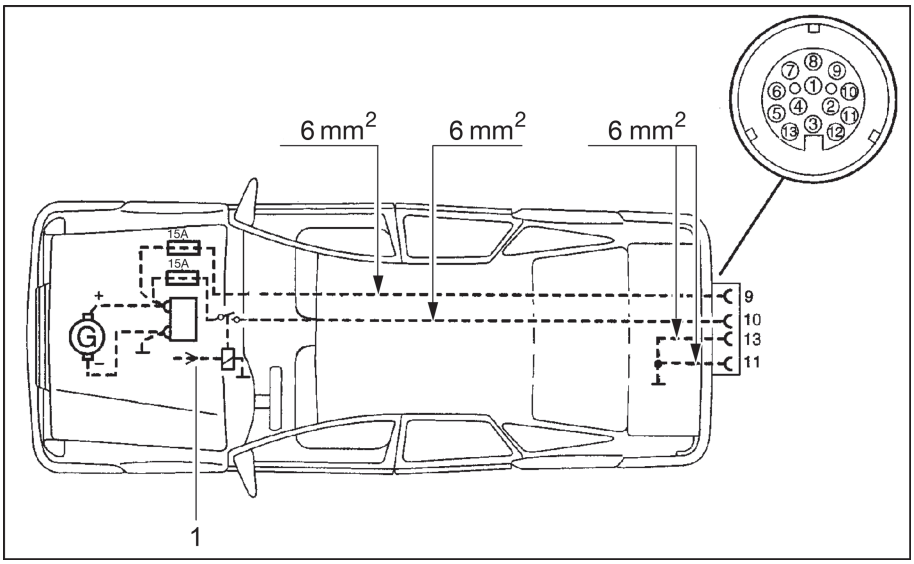

Fig. 95 Towing vehicle installation diagram

1 Relay

- ▷ At 12 V battery in the caravan:
  If the LED display of the ATC lights up or flashes although the caravan is connected to 240 V and not to the towing vehicle, proceed as follows:

- Switch the 240 V safety cut-out (see Fig. 93) and the main switch battery (see Fig. 86) on and off briefly in order to interrupt the current flow.
- If no panel with main switch battery exists, interrupt the current supply directly at the 12 V battery.

9 Electrical system

10 Appliances

Chapter overview

This chapter contains instructions regarding the appliances of the vehicle.

The instructions refer exclusively to the operation of the appliances.

Further information about the appliances can be found in the instruction manuals for the appliances, included separately with the vehicle.

The instructions address the following topics:

- heater
- air conditioning unit
- boiler
- gas cooker
- gas oven
- microwave oven
- extractor hood
- refrigerator

10.1 General

▷ The heat exchanger of the Truma hot-air heater has to be replaced after 30 years. The heat exchanger of the Alde hot-water heater has to be replaced after 10 years. Only the manufacturer of the heater or an authorised specialist workshop is allowed to replace the heat exchanger. The operator of the heater must see to it that the parts are replaced.

▷ For safety reasons, spare parts for pieces of heating appliances must correspond with manufacturer's instructions and be permitted by the manufacturer as a spare part. These spare parts may only be fitted by the manufacturer or an authorised specialist workshop.

▷ Further information can be obtained in the instruction manual for the respective appliance.

The heater, boiler, cooker and refrigerator are fitted depending on the model of the vehicle.

In this instruction manual a description is given only for the operation of the appliances and their particular features.

To operate gas appliances, first open the regulator tap on the gas bottle and the gas isolator tap corresponding to the appliance.

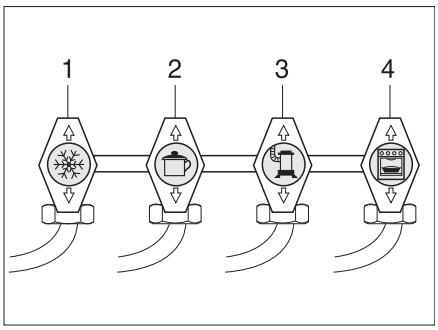

1 Refrigerator
2 Cooker
3 Heater/boiler
4 Oven

Fig. 96 Symbols for the gas isolator taps

10 Appliances

10.2 Heater

- In winter, check that the waste gas vent on the roof is free of snow and ice before using the heater.
- Never let gas escape unburned due to danger of explosion.
- When filling the fuel tank of the towing vehicle, on ferries or in the garage, never run the heater in gas operation. Danger of explosion!
- Never operate the heater in gas operation in closed rooms (e.g. garages). Danger of poisoning and suffocation!
- If the circulation fan does not switch on automatically, switch the circulation fan from heat setting 3 to 4. There is danger of overheating for the heater!
- Do not damage the exhaust gas pipe.
- The waste gas vent may neither be closed nor blocked.
- When camping in winter, the Truma waste gas vent extension should be used to prevent snow from choking the waste gas vent.
- Do not use the space behind the heater as a storage compartment.

Start-up

When lighting the heater for the first time a small amount of smoke and odour will occur. Immediately set the operating switch of the heater to its highest position. Open doors and windows and ventilate well. Smoke and odour will disappear by themselves after a while.

10.2.1 To heat properly

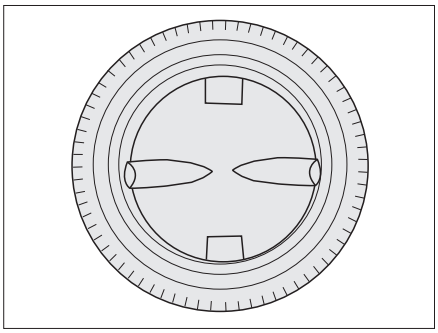

Fig. 97 Air outlet nozzle

Hot air distribution

Several air outlet nozzles (Fig. 97) are built into the vehicle. Pipes conduct the warm air to the air outlet nozzles. Turn the air outlet nozzles in a suitable position so the air can escape as required.

Adjusting the air outlet nozzles

- Fully open: Full hot air stream
- Half or partially open: Reduced hot air stream

When five air outlet nozzles are completely opened, less warm air escapes through each nozzle. However, if only three air outlet nozzles are opened, more warm air flows out of each nozzle.

10.2.2 Hot-air heater Truma S 3004 (P)/S 5004

▶ In case of problems wait for 3 minutes before trying again.

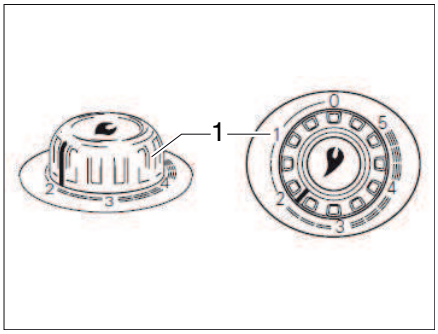

Fig. 98 Hot-air heater control knob

Switching on without automatic ignition:

- Open the regulator tap on the gas bottle and the gas isolator tap "Heater".
- Turn the control knob on the heater (Fig. 98,1) to the required position and press down to its stop limit.
- Strike gas lighting button (at the control knob) several times in succession.
- Keep the control knob pressed until the flame burns. You can check in the inspection window in the heater cover whether the flame is burning.
- Hold down for a further 10 seconds, until the ignition fuse starts up.

Switching on with automatic ignition:

- Open the regulator tap on the gas bottle and the gas isolator tap "Heater".
- Turn the control knob on the heater (Fig. 98,1) to the required position and press down to its stop limit.
  The automatic ignition produces ignition sparks. A clicking noise can be heard.
- Keep the control knob pressed until the flame burns. You can check in the inspection window in the heater cover whether the flame is burning.
- Hold down for a further 10 seconds, until the ignition fuse starts up.

▷ The automatic ignition sparks until the gas burns. If there is no gas, it will continue to spark until the battery in the automatic ignition is empty. When the heater is not required, set the control knob to "0" to avoid the battery in the automatic ignition running flat.

▷ If the clicking noise cannot be heard at all or only in intervals of several seconds during ignition: Changing the battery on the automatic ignition.

▷ Insert new batteries before the beginning of every heating season.

Switching off:

- Turn the control knob at the heater (Fig. 98,1) to "0". The automatic ignition is switched off simultaneously.
- Close the "Heater" gas isolator tap and the main regulator tap on the gas bottle.

▷ Further information can be obtained from the separate instruction manual "Truma S 3004 (P) / S 5004".

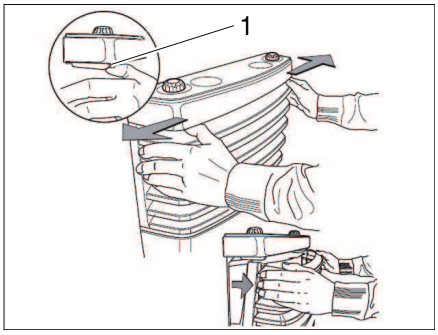

Fig. 99 Removing the heater cover

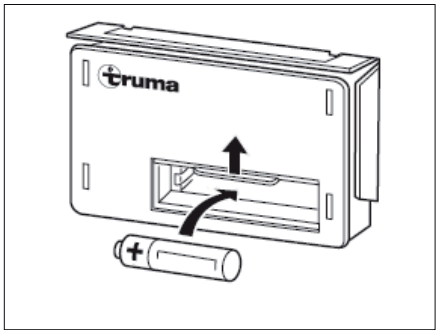

Fig. 100 Changing the batteries

Changing the battery on the automatic ignition:

- Ensure that the heater is switched off and, if applicable, cooled down.
- Remove the heater cover. To do so, push the locking springs (Fig. 99,1) sideways and outwards, swivel the cover forwards and lift it out of the lower brackets.
- Slide the cover of the battery compartment at the automatic ignition (Fig. 100) upwards.
- Remove the old battery from the battery compartment of the automatic ignition.
- Insert a new battery of the same type into the battery compartment of the automatic ignition, observing the correct polarity (+/-) (Fig. 100). Use only temperature-resistant (+70 °C) and leak-proof Mignon batteries.
- Slide the cover of the battery compartment at the automatic ignition downwards.

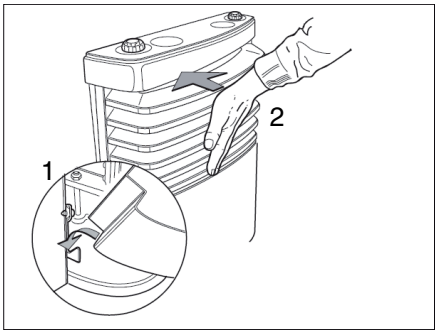

Fig. 101 Mounting the heater cover

- Mount the heater cover. To do so, insert the cover into the lower bracket (Fig. 101,1).
- Swivel the cover in until the catch levers engage audibly (Fig. 101,2).
- Check for correct sitting by pulling the cover.

10.2.3 Circulation fan

The circulation fan together with the hot-air heater ensures a better distribution of hot air throughout the caravan.

Depending on the model either one or two circulation fans are installed in the vehicle.

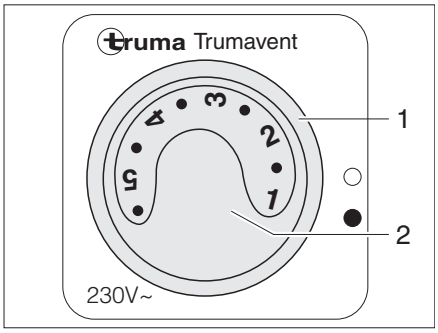

Fig. 102 Operating switch for circulation fan (240 V)

Switching circulation fan (240 V) on:

- Turn the rotary switch (Fig. 102,1) to "●".
- Turn the knob (Fig. 102,2) to the required position of the circulation fan.

Switching circulation fan (240 V) off:

- Turn the rotary switch (Fig. 102,1) to "○".

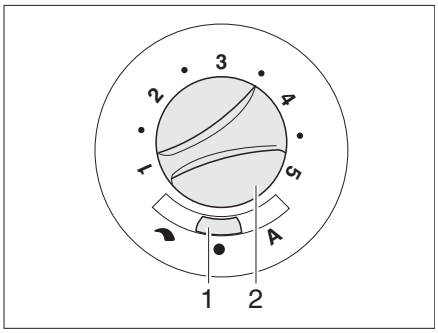

Fig. 103 Operating switch for circulation fan (12 V)

A circulation fan for 12 V line voltage is available as special equipment.

Switching circulation fan (12 V) on:

- Set sliding switch (Fig. 103,1) to "⌒" (manual control) or "**A**" (automatic operation).
- If "⌒" (manual control) is set on the sliding switch (Fig. 103,1): Turn the knob (Fig. 103,2) to the required position of the circulation fan.

Switching circulation fan (12 V) off:

- Set the sliding switch (Fig. 103,1) to "●" (off). This switch setting has no function in heating operation.

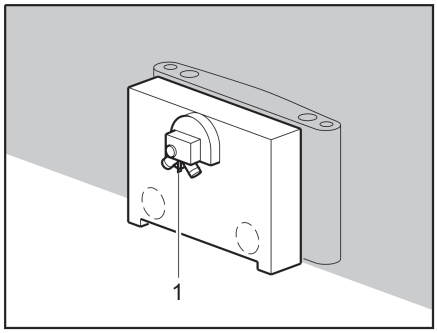

Fig. 104 Circulation fan

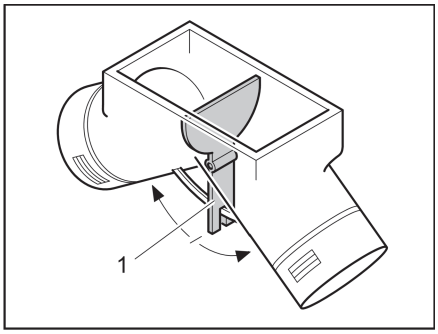

Fig. 105 Circulation fan, adjustment flap in central position

The hot air flow can be adjusted as required with the operating lever (Fig. 104,1) on the back of the circulation fan. Factory setting is the central position.

In the central position the warm air is distributed evenly to each warm air outlet. The operating lever (Fig. 105,1) for the adjustment flap is located under the base flap in the wardrobe.

Setting the hot air distribution:

- Undo bottom locker wood screws.
- Remove bottom locker cover.
- Push the operating lever (Fig. 105,1) in the direction of the arrow until the required position has been reached.

▷ Further information can be obtained from the separate "Trumavent" instruction manual.

10.2.4 Airmix comfort package

The air circulation fan can be installed on the floor or on the wall with the Airmix comfort package. This guarantees a particularly quiet running, since no noise transferring connection is made to the fitted cover of the heater.

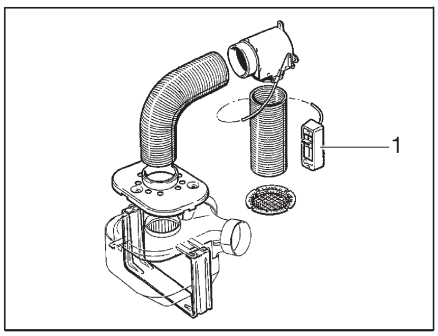

Fig. 106 Airmix comfort package

Fresh outside air is guided into the caravan by the Airmix. Advantages of outside air are:

- Cooling effect in the summer
- Drying effect in the winter

The outside air can be mixed progressively with the inside air that has already been heated by adjusting the operating controls (Fig. 106,1).

10 Appliances

▷ For installation instructions refer to the separate instruction manual of the Airmix comfort package.

10.2.5 Alde hot-water heater

▷ Never run the hot-water heater without heating fluid. Observe the specifications in Chapter 13.

▷ Never drill holes in the floor. This might damage the hot-water pipes.

▷ Do not use the space above and behind the heater as a storage compartment.

▷ The circulating pump must always be turned on when the hot-water heater is in operation.

▷ We recommend bleeding the heating system after the initial heater operation to checking the glycol content. Observe the specifications in Chapter 13.

▷ When the heater is turned on, it starts with the last settings used.

▷ For further information, see the separate manufacturer's instruction manual and observe the maintenance instructions found in Chapter 13.

▷ For further information about the use of the boiler see Section "Boiler".

The hot-water heater is usually fitted below in the wardrobe.

Operating unit

The operating unit is divided into two sections:

- Display (touch screen)
- Control buttons

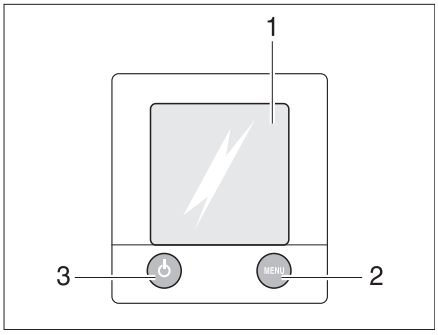

1 Display (touch screen)
2 "Menu" button
3 On/Off button

Fig. 107 Operating unit for hot-water heater

▷ If no button is pressed, the operating unit automatically switches to the home position after two minutes.

▷ Changes to the settings are saved automatically after 10 seconds.

Control buttons

The control buttons have the following functions:

No. in Fig. 107	Button	Function
2	MENU	Open adjustment menu
3	⏻	Activate heating

Display

The display (Fig. 107,1) is designed as a touch screen. Touching the symbols calls up the relevant function.

10 Appliances

Start screen

The Start screen appears on the display after the heater is switched on. The Start screen contains the following information:

Symbol	Meaning
	This symbol appears when the circulating pump is activated
	This symbol appears when a switching facility for gas cylinders is activated
	This symbol appears when a voltage of 240 V is present at the heater
	The internal temperature is displayed next to this symbol
	The external temperature is displayed next to this symbol if an external sensor is fitted

Adjustment menu

The "MENU" button calls up the adjustment menu. The meanings of the individual symbols are described in the following table.

The values can be increased or reduced via the "+" or "-" symbols.

Symbol	Meaning
	Set the desired temperature from +5 to +30 °C
	Set the water temperature in the boiler
	Set the heat output in electrical operation
	Activate the function "Heating in gas operation"
	Call up the enabling menu for the tool menus

Resetting the heating to the factory setting:

- Keep the "MENU" button pressed for 15 seconds.

Tool menus

The various heater functions can be called up and adjusted via the tool menus. The arrow symbols are used to change between the menus. The meanings of the individual symbols are described in the manufacturer's instruction manual.

Setting the pump speed:

- Press the "MENU" button.
- Press the " " symbol.
- Press the " " symbol.
- Page downward using the arrow.
- Press the " " symbol.
- Press the "+" button until the desired level has been reached.
- Use the "OK" button to confirm the entry.

10 Appliances

Selecting the operating mode

The hot-water heater can be operated with the following energy sources:

- Gas operation
- 240 V electrical operation
- Gas and 240 V electrical operation

The operating mode is selected on the operating unit.

Selecting gas operation:

- Press the "On" button next to the " " symbol. The gas operation is activated.

Selecting 240 V electrical operation:

- Press the "+" button next to the " " symbol until the desired heat output is reached.

▷ Select the output level during 240 V electrical operation in such a way that it corresponds to the 240 V connection protection:

Level 1 (1050 W) at 6 A

Level 2 (2100 W) at 10 A

Level 3 (3150 W) at 16 A

Selecting gas and 240 V electrical operation:

- Select gas operation and 240 V electrical operation on the operating unit.

▷ If gas and 240 V electrical operation is selected and if the vehicle is connected to the 240 V power supply, then the hot-water heater at first only operates in 240 V electrical operation. Only if the heat output is insufficient, does the gas operation also automatically switch on.

▷ The gas operation is only possible when the regulator tap on the gas bottle and the gas isolator tap are opened.

▷ 240 V electrical operation is only possible when the vehicle is connected to the 240 V power supply.

When the heater is turned on, it starts with the last set operating mode.

Switching on the heater:

- Press the "⏻" button. The Start screen appears in the display. The heater starts automatically.

Switching the heater off:

- Press the "⏻" button. The heater is turned off.

240 V circulating pump

Depending on the equipment, the hot-water heater has an additional 240 V circulating pump.

The switch for switching between the 12 V circulating pump and the 240 V circulating pump is located on the hot-water heater operating unit.

Setting the rotational speed of the circulating pump

▷ Level 2 = Normal level

▷ Level 5 = Ventilation

Setting the output:

- Set the adjusting screw at the pump to Level 2.
- To ventilate the pump set the adjusting screw to Level 5.

10 Appliances

10.2.6 Ultraheat additional electric heater

The Ultraheat additional electric heater is built-in to the hot-air heater. Therefore there are three heating options:

- Only the hot-air heater
- Hot-air heater and electric heater
- Only the electric heater

The vehicle can be heated more quickly with the additional electric heater.

▷ The additional electric heater only operates if the vehicle is connected to the 240 V power supply.

▷ If the heater is operated simultaneously with current and gas, the additional electric heater switches off before possible overheating by the stronger gas burner occurs.

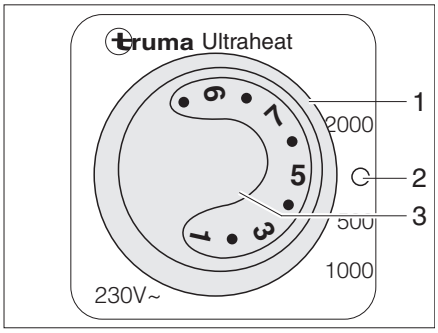

1 Rotary switch
2 Off
3 Temperature control knob

Fig. 108 Operating unit for Ultraheat additional electric heater

Switching on:

- Connect the vehicle to the 240 V power supply (see Section 9.8).
- Turn the rotary switch (Fig. 108,1) to the desired output level (500, 1000 or 2000 W).
- Turn the temperature control knob (Fig. 108,3) to the desired output level.

Switching off:

- Set the rotary switch (Fig. 108,1) to "O" (Fig. 108,2).

10.2.7 Warming unit for waste water pipes (special equipment)

▷ Always only press the test button briefly.

▷ The warming unit only functions when the vehicle is connected to a 240 V power supply.

In order to prevent waste water pipes freezing up, the waste water pipes can be electrically warmed.

When the warming unit is turned on, the temperature of the waste water pipes is monitored by temperature sensors. If the temperature falls below 5 °C, the heating elements are switched on and the waste water pipes are warmed. If the temperature rises above a certain level, the heating elements are switched off again.

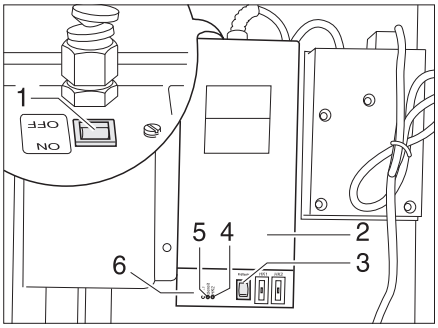

Fig. 109 Transformer with control unit

The 240 VAC/12 VDC transformer (Fig. 109,2) is installed in the wardrobe or in the storage area beneath the seating group, depending on the model.

The control unit is integrated in the transformer housing. The control lamps have the following meanings:

- The indicator lamp (Fig. 109,5) lights up in green: Regulation in operation
- The indicator lamps (Fig. 109,4 and 6) light up in red: Waste water pipes are warmed

A test button (Fig. 109,3) is integrated in the housing with which the control unit can be operated for a short time. By pressing the test button, the function of the warming unit can be tested, even if the ambient temperature is above 5 °C.

Switching on:

- Connect the vehicle to a 240 V power supply (see Section 9.8.1).
- Turn the switch (Fig. 109,1) on the transformer (Fig. 109,2) to "ON".

Switching off:

- Turn the switch (Fig. 109,1) on the transformer (Fig. 109,2) to "OFF".

10.2.8 Electrical floor warming unit (special equipment)

▶ On models with electrical floor warming unit, never drill holes in the floor or screw in any screws. Caution with sharp-edged or pointed objects. There is danger of a power cut or a short circuit due to damage to a heater wire.

▷ Do not cover the regulator. Danger of overheating!

▷ The electrical floor warming unit only operates if the vehicle is connected to the 240 V power supply.

▷ The output of the electrical floor warming unit alone is not sufficient to heat the living area.

The regulator for the electrical floor warming unit is installed in the bench seat or in the wardrobe, depending on the model.

Operating levels

The electrical floor warming unit has four operating levels:

- 0 "Off"
- 20 V "low heating level"
- 22 V "medium heating level"
- 24 V "high heating level"

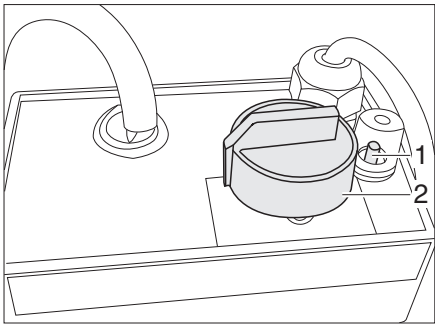

Fig. 110 Regulator for electrical floor warming unit

Switching on:

- Connect the vehicle to the 240 V power supply (see Section 9.8.1).
- Turn the control knob (Fig. 110,2) to the desired heating level.

Switching off:

- Turn the control knob (Fig. 110,2) to the setting "0".

After switching off, the floor remains warm for a while, due to residual heat.

If the regulator is overloaded, the overload protection is actuated. The pin (Fig. 110,1) will trip.

Switching on overload protection:

- Press in the pin (Fig. 110,1) at the overload protection when the regulator has cooled down.

10.2.9 Floor warming unit/warming unit for waste water tank (special equipment)

▷ For models with a floor warming unit and a warming unit for the waste water tank, never drill holes in the floor or screw in any screws. Danger of damage to a heating line and water leaking into the floor.

▷ The floor warming unit and waste water tank warming unit only operate when the hot-water heater is switched on.

The floor warming unit and waste water tank warming unit are connected to the water circulation of the hot-water heater.

The regulator for the floor warming unit is installed on the right side of the vehicle, on the floor at axle-height. The regulator for the waste water tank warming unit is installed in the surroundings of the waste water tank inside the vehicle.

The heating output of the warming units for the floor and the waste water tank can be adjusted by the continuously variable controls.

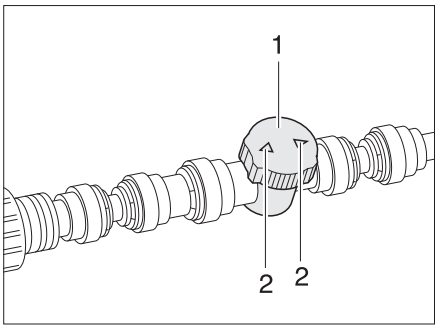

Fig. 111 Regulator for floor warming unit/ warming unit for waste water tank

Switching on:

- Switch on the hot-water heater (see Section 10.2.5).
- Set the regulator (Fig. 111,1) to the desired flow level (max flow = arrows (Fig. 111,2) in direction of lines).

Switching off:

- Turn the regulator (Fig. 111,1) until both arrows (Fig. 111,2) are at a right angle to the heating lines.
- Switch off the hot-water heater if necessary (see Section 10.2.5).

10 Appliances

10.3 Air conditioning unit

10.3.1 Air conditioning unit (Teleco)

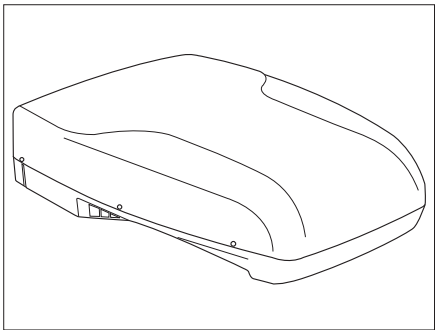

Fig. 112 Roof view

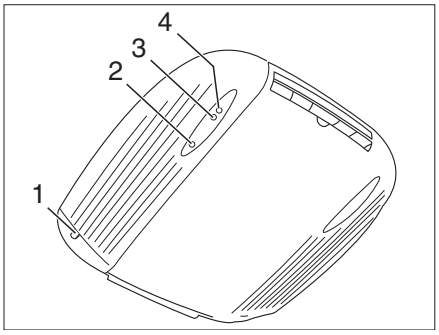

Fig. 113 Interior view

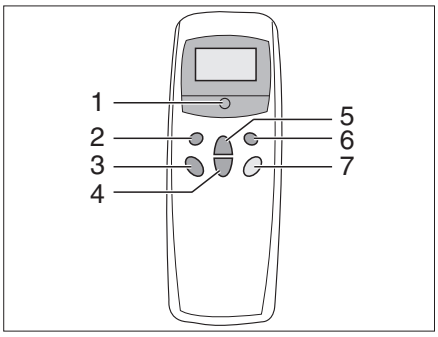

Fig. 114 Remote control

The air conditioning unit is located on the roof of the vehicle. The remote control (Fig. 114) for the air conditioning unit is located in the kitchen area.

Switching on:

- Connect the vehicle to the 240 V power supply. The air conditioning unit is ready to operate. The red LED (Fig. 113,2) lights up.
- Switch on the remote control at the switch (Fig. 114,5).
- Set the desired operating mode using the button (Fig. 114,1).
  The green indicator lamp (Fig. 113,3) indicates cooling operation, the red indicator lamp (Fig. 113,4) heating operation.
  - "COOLING"
  - "AUTOMATIC"
  - "HEATING"
- If necessary, use the buttons (Fig. 114,3 and 4) to set the desired fan output and room temperature.

Switching off:

- To switch off press the button (Fig. 114,5) on the remote control again.

10.3.2 Air conditioning unit (Dometic)

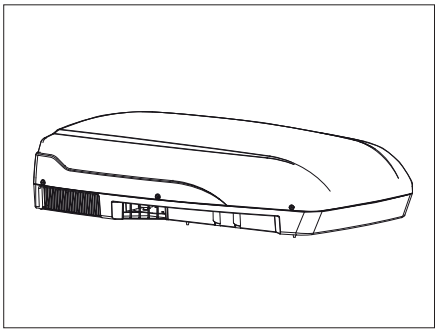

Fig. 115 Roof view

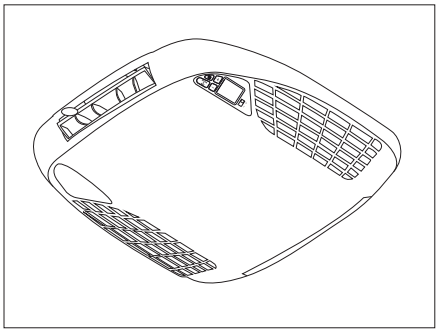

Fig. 116 Interior view

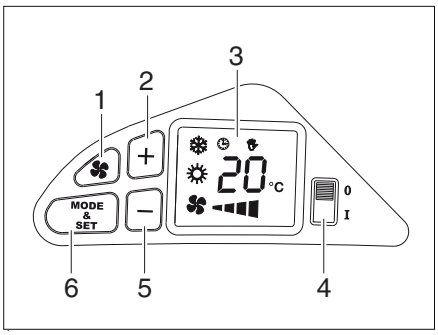

Fig. 117 Operating panel

The air conditioning unit is located on the roof of the vehicle. The air conditioning unit is operated via the operating panel in the interior.

Switching on:

- Connect the vehicle to the 240 V power supply. The air conditioning unit is ready to operate.
- Switch on the air conditioning unit with the switch (Fig. 117,4). When it is switched on, the system always waits 2 minutes before it switches on the compressor and changes to automatic operating mode.
- Select the desired operating mode using the button (Fig. 117,6).
  The symbols in the display (Fig. 117,3) show the selected operating mode:
  - COOLING, manual
  - HEATING, manual
  - VENTILATION, manual
  - AUTOMATIC MODE
- The ventilation speed is set in manual mode by simultaneously pressing the button (Fig. 117,1) and one of the buttons (Fig. 117,2) or (Fig. 117,5).
- The temperature is set by pressing the buttons (Fig. 117,2) or (Fig. 117,5)

Switching off:

- Switch off the air conditioning unit with the switch (Fig. 117,4).

10 Appliances

10.4 Boiler

- ▶ Never let gas escape unburned due to danger of explosion.
- ▶ When filling the fuel tank of the towing vehicle, on ferries or in the garage, never run the boiler in gas operation. Danger of explosion!
- ▶ Never operate the boiler in gas operation in closed rooms (e.g. garages). Danger of poisoning and suffocation!
- ▶ The water in the boiler can be heated up to 65 °C. Risk of scalding!

- ▷ When the vehicle is not being used, switch off and drain the boiler.
- ▷ Never use boiler when empty.
- ▷ If the boiler is not being used, empty it if there is any risk of frost.
- ▷ Only operate the boiler with the maximum temperature setting if you require a large quantity of warm water. This protects the boiler against the build-up of limescale.

- ▷ Dethleffs recommends that you do not use the water from the boiler as drinking water.

10.4.1 Models with waste gas vent on the right-hand side of the vehicle

- ▶ If the awning is put up and the boiler is running in gas operation, exhaust gases from the boiler can escape into the awning area. Danger of suffocation! Make sure the area is sufficiently ventilated.

10.4.2 Boiler Truma (special equipment)

- ▶ Before starting up the Truma boiler remove the cap from the waste gas vent.

Operating modes

The boiler has three operating modes:

- Gas operation
- 240 V electrical operation
- Combined operation

The operating mode is set with the operating controls.

The regulation of the water temperature in the boiler is only possible with gas operation.

10 Appliances

Gas operation

The boiler is operated exclusively with gas.

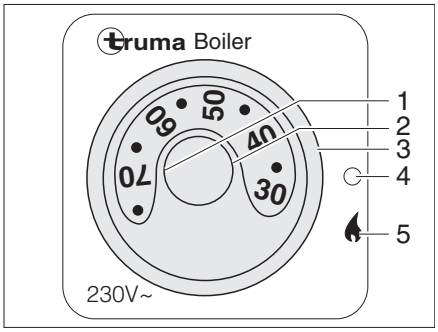

1 Temperature control knob
2 Red indicator lamp "Fault"
3 Rotary switch
4 Off
5 On

Fig. 118 Operating unit for Truma boiler (gas operation)

Switching on:

- Remove cap from waste gas vent.
- Open the regulator tap on the gas bottle and the gas isolator tap "Boiler".
- Set the rotary switch (Fig. 118,3) to "🔥" (Fig. 118,5). The green "Operation" indicator lamp illuminates the knob (Fig. 118,1).
- Adjust the knob (Fig. 118,1) to the required water temperature.

The red indicator lamp (Fig. 118,2) illuminates when there is a fault (see Chapter 16).

Switching off:

- Set the rotary switch (Fig. 118,3) on the operating unit (Fig. 118) to "O" (Fig. 118,4).
- Close the gas isolator tap "Boiler" and the regulator tap on the gas bottle.
- Place cap on waste gas vent.

The red indicator lamp (Fig. 118,2) illuminates when there is a fault (see Chapter 16).

240 V electrical operation

The boiler is operated exclusively with electricity.

▷ 240 V electrical operation is only possible when the vehicle is connected to the 240 V power supply.

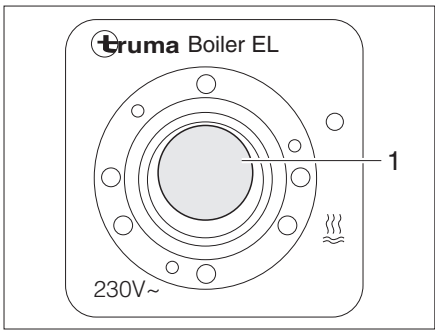

Fig. 119 Flip switch for Truma boiler (240 V electrical operation)

Switching on:

- Connect the vehicle to the external 240 V power supply and switch on the 240 V automatic circuit breaker.
- Set the flip switch (Fig. 119,1) to on. The indicator lamp on the switch is illuminated. The water in the boiler is heated up to 65 °C.

Switching off:

- Set the flip switch (Fig. 119,1) to "O". The indicator lamp on the switch goes off.

Combined operation

The water is heated more quickly in the boiler if gas operation and 240 V electrical operation are switched on simultaneously.

▷ Further information can be obtained in the manufacturer's instruction manual.

Filling/emptying the boiler

The boiler can be supplied with water from the water tank.

Depending on the model, the vehicle is fitted with one or several boiler drain cocks. The drain cocks can have different designs (rocking lever or twist cap).

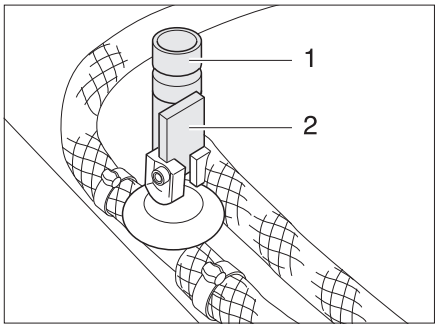

Fig. 120 Drain cocks for Truma boiler

Filling the boiler with water:

- Close all boiler drain cocks. To do this, position the rocking lever (Fig. 120,2) horizontally or turn the cap (Fig. 120,1) in a clockwise direction.
- Switch on 12 V power supply on the panel.
- Set all the water taps to "Hot" and open them. The water pump is turned on. The hot water pipes are filled with water.
- Keep the taps open until the water flowing out of the taps has no bubbles in it. This is the only way to ensure that the boiler is full of water.
- Close all water taps.

Emptying the boiler:

- Set the rotary switch (Fig. 118,3) on the operating unit (Fig. 118) to "O" (Fig. 118,4) or the flip switch (Fig. 119,1) to "O".
- Turn the knob (Fig. 118,1) anticlockwise until it can go no further.
- Open all boiler drain cocks. To do so, position the rocking lever (Fig. 120,2) vertically or turn the cap (Fig. 120,1) anticlockwise.
- Check whether the water has been drained completely from the boiler (approx. 12.5 litres).

▷ Because of the suction effect, a part of the water supply can be also drained from the lines and the water tank. The water system is however not completely emptied.

10.4.3 Boiler Alde (special equipment)

Switching the boiler on/off

The boiler is integrated in the hot-water heater. Separate operation is not possible. For information about operating the hot-water heater see Section 10.2.5.

Filling/emptying the boiler

The boiler can be supplied with water from the water tank.

▷ Depending on the model, the vehicle is fitted with one or two drain cocks.

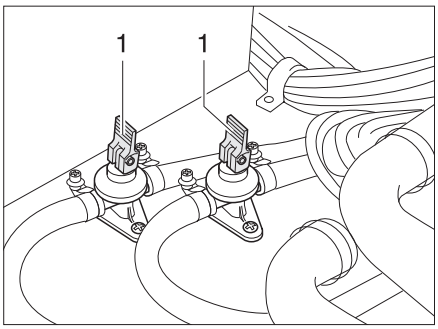

Fig. 121 Drain cocks

Filling the boiler with water:

- Close the drain cocks. Position the rocking levers (Fig. 121,1) horizontally.
- Switch on 12 V power supply on the panel.
- Set all the water taps to "Hot" and open them. The water pump is turned on. The hot water pipes are filled with water.
- Keep the taps open until the water flowing out of the taps has no bubbles in it. This is the only way to ensure that the boiler is full of water.
- Close all water taps.

Emptying the boiler:

- Switch off boiler.
- Open all water taps and set to the central position.
- Open the drain cocks (Fig. 121). Position the rocking levers (Fig. 121,1) vertically. The boiler is drained to the outside using the drain cocks.
- Check whether the water has been drained completely from the boiler (approx. 12.5 litres).

▷ Further information can be obtained in the manufacturer's instruction manual.

10.4.4 Water heater Truma

- ▷ If you want to empty the water heater: Empty the water tank completely before opening the drain cocks of the water heater.
- ▷ Do not install a non-return valve in the cold water pipe between the water heater and the water pump.
- ▷ Use a pressure reducer in case of a central water supply or more powerful pumps. The water heater is only designed for a maximum pressure of 1.2 bars. Insert a safety/drainage valve additionally in the cold water pipes.

- ▷ Do not use the water from the water heater as drinking water.

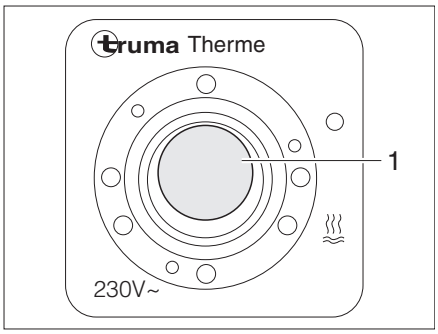

Fig. 122 Operating switch for water heater

The water heater can either be operated using the 240 V power supply (electrical mode of operation), with the hot air of the heater system or both types of energy. The water heater heats approx. 5 l water to a temperature of approx. 65 °C.

The electrical mode of operation is activated using the operating switch (Fig. 122). The indicator lamp (Fig. 122,1) on the switch must light up.

During hot air operation, the water in the water heater is heated up by the heater and the circulating air.

Switching on:

- ■ Connect the vehicle to the external 240 V power supply and switch on the 240 V automatic circuit breaker.
- ■ Switch on the operating switch (Fig. 122). Indicator lamp (Fig. 122,1) on the switch lights up.

The water in the water heater is heated up to 65 °C.

Switching off:

- Switch off the operating switch (Fig. 122). The indicator lamp (Fig. 122,1) on the switch goes off.

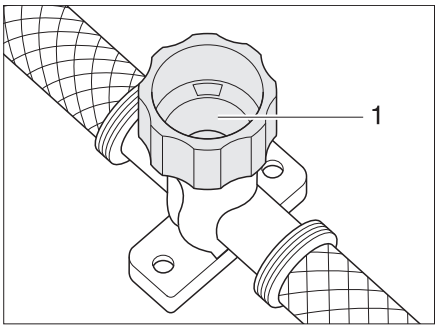

Fig. 123 Drain cock for water heater

Filling the water heater with water:

- Connect the vehicle to the external 240 V power supply and switch on the 240 V automatic circuit breaker.
- Switch off the operating switch (Fig. 122). The indicator lamp (Fig. 122,1) in the switch is not on.
- Close the drain cock. To do so, turn the cap (Fig. 123,1) clockwise.
- Set all the water taps to "Hot" and open them. The water pump is turned on. The hot water pipes are filled with water.
- Keep the taps open until the water flowing out of the taps has no bubbles in it. This is the only way to ensure that the water heater is full of water.
- Close all water taps.

Emptying the water heater:

- Set the 12 V main switch on the panel to "AUS" ("OFF") (Autark Package).
- Switch off the 240 V power supply at the 240 V automatic circuit breaker.
- Remove the cap of the water tank.
- Take out the stopper of the water tank.
- Open all water taps and set to the central position.
- Hang the shower handset up in the shower position.
- Hold the water pump up until the water pipes are completely empty.
- Open the drain cock of the water heater. To do so turn the cap (Fig. 123,1) anti-clockwise.
- Check whether the water is completely drained from the water heater.

▷ Further information can be obtained from the separate instruction manual "Water heater".

10.5 Cooker

- ▶ Never let gas escape unburned due to danger of explosion.
- ▶ Before using the cooker make sure that there is sufficient ventilation. Open windows or the skylight.
- ▶ Do not use gas cooker or gas oven for heating.
- ▶ Always protect your hands with cooking gloves or potholders when handling hot pots, pans and similar items. There is a risk of injury.

10 Appliances

10.5.1 Gas cooker

- During activation and operation of the gas cooker, no flammable or easily combustible objects such as dishcloths, napkins etc. may be near the gas cooker. Fire hazard!
- The process of ignition must be visible from above and must not be covered by cooking pans placed on the cooker.
- Depending on the model, the gas cooker lid is held closed by a spring. When closing there is danger of getting injured!

- Do not use the glass gas cooker lid as a hob.
- Do not close the gas cooker lid while the gas cooker is in operation.
- Do not apply pressure on the gas cooker lid when it is closed.
- Do not place hot cooking pans on the gas cooker lid.
- Keep the gas cooker lid open after cooking as long as the burner emits heat. The glass plate could otherwise burst.

- Use only pots and pans whose diameter is suitable for the burner grates of the gas cooker.
- When the flame fades, the thermocouple automatically cuts the gas supply.
- Further information can be obtained from the separate instruction manual "Gas cooker".

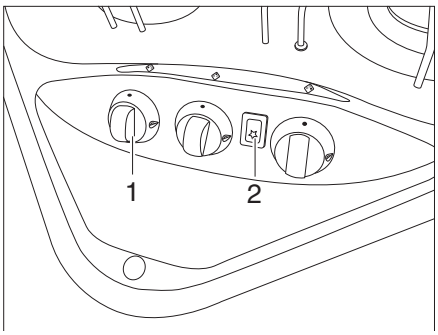

Fig. 124 Operating controls for gas cooker

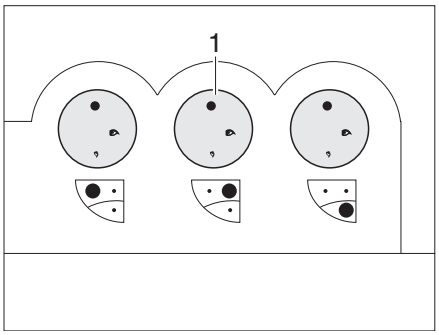

Fig. 125 Alternative: Operating controls for gas cooker

Switching on:

- Open the regulator tap on the gas bottle and the gas isolator tap "Cooker".
- Open the gas cooker lid.
- Turn the control knob (Fig. 124,1 or Fig. 125,1) on the burner you wish to use to the ignition position (large flame).
- Press down the control knob and hold it down.
- If an ignition button (Fig. 124,2) is present:
  Create a spark by pushing the ignition button.
- If an ignition button is not present:
  Ignite the burner with a gas lighter, a match or with other suitable means of lighting.
- When the flame burns, hold the control knob down for 10 to 15 seconds, until the thermocouple keeps the gas supply automatically open.
- Release the control knob and turn to the desired setting.
- If ignition was not successful, repeat the entire procedure.

Switching off:

- Turn the control knob to the 0-position. The flame fades.
- Close the gas isolator tap "Cooker" and the regulator tap on the gas bottle.

10.5.2 Gas oven

- Always keep ventilation apertures at the gas oven open.
- There must be no flammable objects near the gas oven when it is being lit.
- The oven flap must remain open when it is being lit.
- If ignition has not taken place, repeat the entire procedure. If necessary, check if there is gas and/or current in the gas oven.
- If the gas oven still does not work, close the gas isolator tap and notify your service centre.
- If the burner flame is accidentally extinguished, switch off the over and leave the burner off for at least 1 minute. Only then ignite it again.
- When grilling pull out the heat protector and leave the flap completely open.

- Before using the gas oven for the first time run it for 30 minutes at maximum temperature without any contents.
- When the flame fades, the thermocouple automatically cuts the gas supply.
- Further information can be obtained from the separate instruction manual "Gas oven".

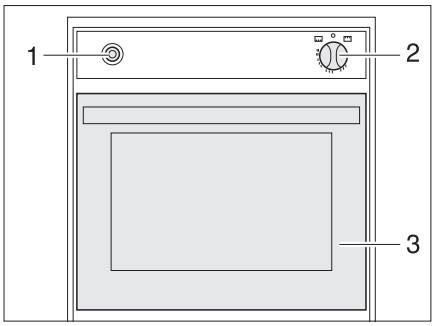

Fig. 126 Gas oven

Switching on:

- Open the regulator tap on the gas bottle and the gas isolator tap "Oven".
- Fully open the oven flap (Fig. 126,3).
- Lightly press control knob (Fig. 126,2) and set to " " (oven) or "

" (grill).
- Press the control knob (Fig. 126,2) and hold it down for 5 to 10 seconds. Gas will stream into the burner.
- Press the ignition switch (Fig. 126,1) repeatedly until there is a flame.
- When the flame burns, hold the control knob down for 10 to 15 seconds, until the thermocouple keeps the gas supply automatically open.
- Release the control knob and turn to the desired setting.

Switching off:

- Turn the control knob (Fig. 126,2) to "O". The flame fades.
- Close the gas isolator tap "Oven" and the regulator tap on the gas bottle.

10 Appliances

10.5.3 Microwave oven

- Only qualified personnel may repair the microwave oven. Improper repairs can cause major risks to the user.
- The protection device against the escape of microwave energy should never be removed.
- Use the microwave oven only if it has been properly installed.
- Only use the microwave oven when the door seal is free of damage.
- Never leave the microwave oven unattended when it is in operation.
- If there is smoke, keep the microwave oven closed, switch it off and interrupt the power supply.

▷ Operate the microwave oven only with the rotary plate and the rotary cross in place.

▷ Use only crockery suitable for microwave use.

▷ The microwave oven only functions with a correct 240 V power supply. In the case of fluctuations of the voltage or of voltage below 240 V, the microwave oven switches itself off completely. Therefore, do not switch on additional 240 V appliances when the microwave oven is in operation. Particularly in southern countries it happens that the line voltage is described as having 240 V but it really does not amount to this value. So it may happen that the microwave oven cannot be operated in these countries.

▷ Further information can be obtained from the separate instruction manual "Microwave oven".

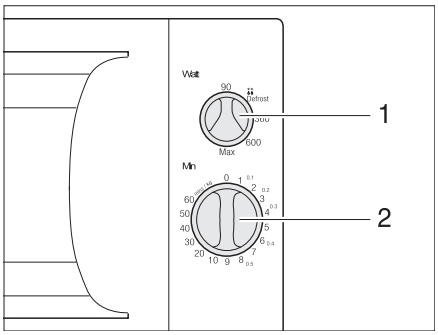

Fig. 127 Operating control for the microwave oven

Switching on:

- Open the door and place foodstuffs into the cooking area.
- Close the door. A clicking noise can be heard when it engages.
- Select the output on the control knob (Fig. 127,1).
- Select the cooking time with the control knob (Fig. 127,2). Cooking begins.

The end of the cooking process is signaled by a signal tone. The microwave oven will switch off automatically.

Switching off:

- Open the door and remove foodstuffs.

10.5.4 Extractor hood

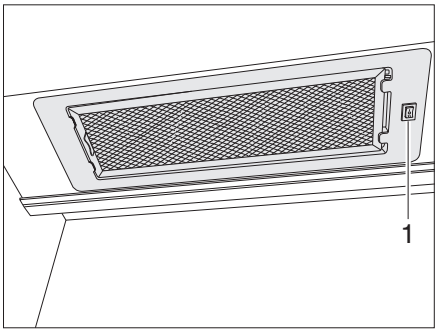

Fig. 128 Extractor hood

The cooker is equipped with an air-circulation extractor hood. This disposes of a two-level fan.

Switching extractor hood on/ off

- Use the switch (Fig. 128,1) to turn the extractor hood on and off.

10.6 Refrigerator

During the journey, only operate the refrigerator via the 12 V power supply. At high ambient temperatures full cooling power is not possible. When external temperatures are high, full cooling power of the cooling unit is only ensured if the refrigerator is ventilated sufficiently. The refrigerator ventilation grill can be removed in order to achieve a better ventilation.

- ▷ When leaving the vehicle, always fit the refrigerator ventilation grills. Otherwise water could penetrate during rain.
- ▷ If the caravan is equipped with the AL-KO Trailer Control System (ATC), the cooling power of the refrigerator during driving is somewhat less than with vehicles without ATC.

10.6.1 Refrigerator ventilation grill

Thetford

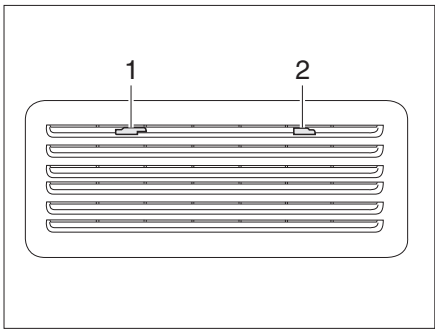

Fig. 129 Refrigerator ventilation grill (Thetford small)

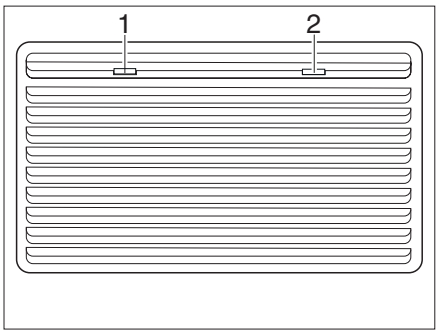

Fig. 130 Refrigerator ventilation grill (Thetford large)

Removal:

- Slide the locking devices (Fig. 129,1 and 2 or Fig. 130,1 and 2) to the middle.
- Remove the refrigerator ventilation grill.

10 Appliances

10.6.2 Operation (Thetford without SES)

Operating modes

The refrigerator has 2 operating modes:

- Gas operation
- Electrical operation (240 VAC or 12 VDC)

The operating mode is set with the operating controls on the refrigerator panel. Infinitely variable regulation of the cooling power is only possible with gas operation and when the refrigerator is operated with 240 V. It is not possible with 12 V operation.

▷ Select only one energy source.

▷ Even when the 12 V supply is switched off, a small electrical current flows which puts an extra load on the living area or vehicle battery. Always switch the refrigerator off during a temporary lay-up.

Gas operation

▶ Never let gas escape unburned due to danger of explosion.

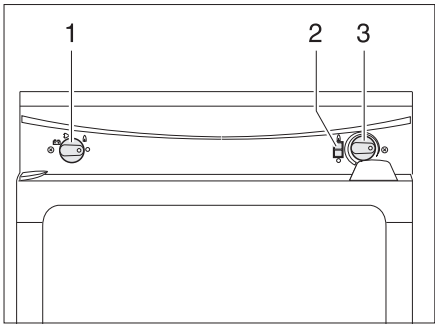

1 Energy selector switch
2 Flame indicator
3 Control knob for setting the temperature

Fig. 131 Operating controls for the refrigerator (Thetford without SES)

Switching on:

- Open the regulator tap on the gas bottle and the gas isolator tap "Refrigerator".
- Set the energy selector switch (Fig. 131,1) to gas "⌂".
- Press the control knob (Fig. 131,3) down and hold it. The gas supply is open. Ignition will take place automatically. A ticking sound can be heard until ignition has been completed successfully.
- Keep the control knob (Fig. 131,3) pressed down until the flame indicator (Fig. 131,2) becomes green and then release it. If the flame fades, then the ignition device will repeat the ignition process.
- Adjust the refrigerating temperature with the control knob.

Switching off:

- Set the energy selector switch (Fig. 131,1) to "O". Refrigerator is switched off.
- Close the gas isolator tap "Refrigerator" and the regulator tap on the gas bottle.

Electrical operation

▷ Close the gas isolator tap "Refrigerator" when the refrigerator is operated electrically.

The refrigerator can be operated with the following voltages:

- 240 VAC
- 12 VDC

Switching the 240 V operation on:

- Set the energy selector switch (Fig. 131,1) to 240 V operation "⏚".
- Use the control knob (Fig. 131,3) to adjust the refrigerating temperature.

Switching the 240 V operation off:

- Set the energy selector switch to "O". Refrigerator is switched off.

Switching the 12 V operation on:

- Set the energy selector switch (Fig. 131,1) to 12 V operation "⎓".

Switching the 12 V operation off:

- Set the energy selector switch to "O". Refrigerator is switched off.

When operated with 12 V, the refrigerator draws power only from the starter battery of the vehicle. During prolonged driving breaks without 240 V power supply therefore change over to gas operation so that the vehicle battery does not discharge and the starting capability of the towing vehicle is preserved.

The thermostat is not activated during 12 V operation. The refrigerator operates continuously.

▷ Further information can be obtained in the manufacturer's instruction manual.

10.6.3 Operation (Thetford N3000)

Operating modes

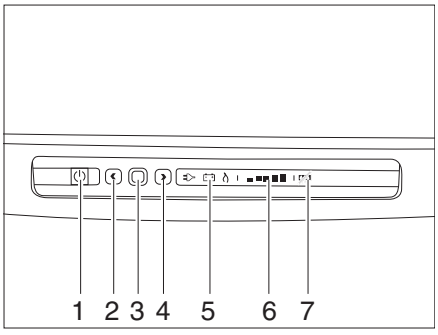

1 On-off switch
2 Arrow button left
3 Confirmation button
4 Arrow button right
5 Operating indicator
6 LED indicator "Temperature level"
7 Display anti-condensation function

Fig. 132 Operating controls for the refrigerator (Thetford)

The refrigerator has 3 operating modes:

- Gas operation
- Electrical operation with 240 V alternating voltage
- Electrical operation with 12 V direct voltage

10 Appliances

The operating mode is set with the operating controls on the refrigerator panel. Infinitely variable regulation of the cooling power is only possible with gas operation and when the refrigerator is operated with 240 V. It is not possible with 12 V operation.

▶ Never let gas escape unburned due to danger of explosion.

▷ Select only one energy source.

▷ Even when the 12 V supply is switched off, a small electrical current flows which puts an extra load on the living area or vehicle battery. Always switch the refrigerator off during a temporary lay-up.

Switching on and off

Switching on:

- If the refrigerator is to be operated with gas, open the regulator tap on the gas bottle and the gas isolator tap "Refrigerator".
- Press the on-off switch and hold it down for 1 second.
- A lamp lights up green in the on-off switch.

Switching off:

- Press the on-off switch again and hold it down for 2 seconds.
- The lamp in the operating panel extinguishes.

▷ Close the gas isolator tap "Refrigerator" when the refrigerator is operated electrically.

▷ If there is no Autark Package, the refrigerator draws power only from the starter battery of the vehicle when operated with 12 V. During prolonged driving breaks without 240 V power supply change over to gas operation so that the vehicle battery does not discharge and the starting capability of the towing vehicle is preserved.

Selecting the energy source:

- Press the confirmation button and hold it down for 2 seconds.
- The symbols for gas, mains and battery operation begin to flash in the display for the energy source.
- Use the arrow buttons to select the desired source.
- Press the confirmation button to confirm the selection.

Selecting the cooling level:

- Press the confirmation button and hold it down for 2 seconds.
- The symbols for gas, mains and battery operation begin to flash in the display for the energy source.
- Press the confirmation button again.
- The display for the cooling level begins to flash.
- Use the arrow buttons to select the desired cooling level.
- Press the confirmation button to confirm the selection.

▷ The appliance has an anti-condensation function to prevent the operating field from being clouded. The function can be switched off to save energy, for example if the battery capacity is dwindling.

Switching off the anti-condensation function:

- Press both arrow buttons simultaneously and hold down for 2 seconds.
- The display symbol for the anti-condensation function lights up and the function is deactivated.

Switching on the anti-condensation function:

- Press both arrow buttons simultaneously and hold down for 2 seconds.
- The display symbol for the anti-condensation function extinguishes and the function is activated.

▷ Further information can be obtained in the manufacturer's instruction manual.

10.6.4 Refrigerator door locking mechanism

With some models, the refrigerator has a separate freezer compartment. The specifications in this section correspondingly also apply to the door of the freezer compartment.

▷ During the journey the refrigerator door must always be closed and be locked in the closed position.

▷ When the refrigerator is switched off, bring the refrigerator door into the ventilation position and lock it in place if possible. This prevents mould from forming.

There are two positions for locking the refrigerator door in place:

- Closed refrigerator door during travel and when the refrigerator is in operation
- Slightly opened refrigerator door as a ventilation position when the refrigerator is switched off

Thetford

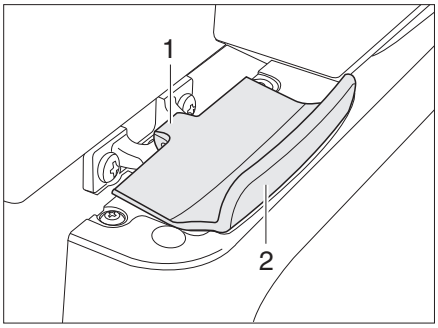

Fig. 133 Lock of refrigerator door, closed (Thetford)

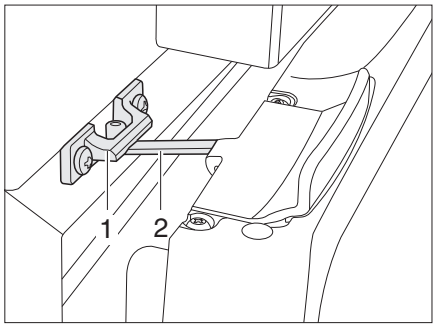

Fig. 134 Refrigerator door in ventilation position (Thetford)

Opening:

- Open the refrigerator door at the handle (Fig. 133,2). The lock (Fig. 133,1) is released automatically.

Closing:

- Fully close the refrigerator door. Ensure that the lock is engaged.

Locking in the ventilation position:

- Slightly open refrigerator door.
- Open the lock (Fig. 134,2) and snap it into the locking catch (Fig. 134,1). The refrigerator door will then stay slightly open.

10 Appliances

11 Sanitary fittings

Chapter overview

This chapter contains instructions regarding the sanitary fittings of the vehicle.

The instructions address the following topics:

- water tank
- waste water tank
- complete water system
- toilet compartment
- toilet

11.1 Water supply, general

- ▶ Only fill the water tank from supply systems that have been verified to provide drinking water quality.
- ▶ Use only hoses or vessels for filling that are approved for drinking water.
- ▶ Rinse the filling hose or vessel thoroughly with drinking water before use (2 to 3 times the capacity).
- ▶ Drain the filling hose or vessel completely after use and close the openings of the filling hose or vessel.
- ▶ Water left standing in the water tank or in the water pipes becomes undrinkable after a short period. Therefore, before each use of the vehicle, thoroughly clean the water pipes and the water tank. After each use of the vehicle completely empty the water tank and the water pipes.
- ▶ In case of lay-ups lasting more than a week, disinfect the water system before using the vehicle.

- ▷ If the vehicle is not used for several days or if it is not heated when there is a risk of frost, empty the entire water system. Leave the water taps on in central position. Leave the safety/drainage valve (if available) and all drain cocks open. Frost damage to appliances, frost damage to the vehicle and deposits in water-carrying components can be avoided in this way.
- ▷ The water pump will overheat without water and can get damaged. Never operate water pump when the water tank is empty.

The vehicle is equipped with a fitted water tank. An electric water pump pumps the water to the individual water taps. Opening a water tap automatically switches on the water pump and pumps water to the tap.

A canister or the waste water tank collects the waste water.

- ▷ Before using the water fittings, the 240 V power supply must be connected and the 240 V automatic circuit breaker must be switched on, or the caravan must be electrically connected to the towing vehicle. Otherwise the water pump will not work.

  This is not required when the caravan is fitted with the Autark Package.
- ▷ When the water tank is re-filled, an air bubble may form at the bottom of the pump. This air bubble will prevent water from being drawn in. Shake the water pump up and down energetically in the water.

11 Sanitary fittings

11.2 Water tank

11.2.1 Drinking water filler neck with cap

▶ The cap for the drinking water filler neck and for the fuel filler neck are very similar. Before filling the tank, always check the label.

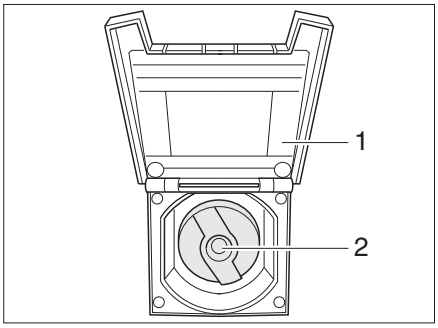

Fig. 135 Cap for the drinking water filler neck

The drinking water filler neck is on the right or left side of the vehicle, depending on the model.

Opening:

- Open the cover (Fig. 135,1) of the drinking water filler neck.
- Insert the key into the locking cylinder (Fig. 135,2) and turn a quarter turn anti-clockwise.
- Remove the cap.
- Fill the water tank with drinking water.

Closing:

- Place the cap on the drinking water filler neck.
- Turn the key one quarter turn clockwise.
- Remove the key.
- Check that the cap sits firmly on the drinking water filler neck.

11.2.2 Filling with water

▶ When filling the water tank, observe the maximum permissible gross weight of the vehicle. Luggage must be reduced accordingly when the water tank is full.

To fill the water tank with drinking water, proceed as follows:

- Open the drinking water filler neck (Fig. 135).
- Fill the water tank with drinking water. Use a water hose, a water canister with a funnel or similar for filling.
- Close drinking water filler neck.

11.2.3 Draining water

To empty the water tank, proceed as follows:

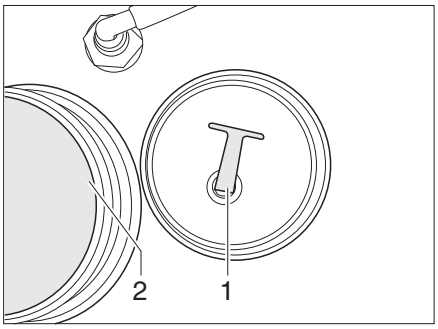

Fig. 136 Water tank

- Unscrew the cap (Fig. 136,2) on the water tank.
- Remove the stopper (Fig. 136,1) from the drainage opening. The water drains off.
- Insert stopper.
- Screw the cap onto the water tank.

11.3 Waste water tank

▶ Before commencing the journey, empty the waste water tank.

▷ If there is any risk of frost, empty the waste water tank. For models with a heater for the waste water tank, the waste water tank is only sufficiently protected from frost when the hot-water heating and the heater for the waste water tank are in operation.

▷ Never pour boiling water directly into the sink outlet. Boiling water could cause deformation and leaks in the waste water pipe system.

▷ Only empty the waste water tank at disposal stations, at camping sites or caravan sites, that are especially provided for this purpose.

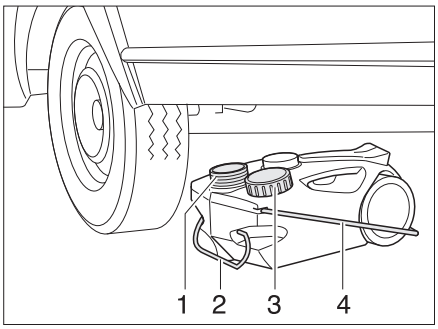

Fig. 137 Waste water tank, mobile

Emptying:

- Close the opening of the waste water tank (Fig. 137,1) with the lid (Fig. 137,3).
- Pull out the waste water tank at the handle (Fig. 137,2).

- Swing up the carrying handle (Fig. 137,4) and set the waste water tank up.
- Only empty the waste water tank (completely!) at disposal stations that are especially provided for this purpose.

11.4 Filling the water system

▶ When filling the water tank, observe the maximum permissible gross weight of the vehicle. Luggage must be reduced accordingly when the water tank is full.

▷ The water pump will overheat without water and can get damaged. Never operate water pump when the water tank is empty.

▷ The water level can be checked on the panel while the water tank is being filled (Autark Package).

- Position the vehicle horizontally.
- Connect the 240 V power supply and switch on the 240 V automatic circuit breaker. As far as the Autark Package with battery is concerned, a 240 V power supply is not necessary.
- Switch on the 12 V main switch on the panel (Autark Package).
- Clean or disinfect water system.
- Close drain cocks for the boiler and hot water source.
- Close all water taps.
- Open the cap on the water tank.
- Close the drainage opening in the water tank with the stopper provided.
- Firmly close the water tank again with the cap.
- Fill the water tank with drinking water. Use a water hose, a water canister with a funnel or similar for filling.
- Set all the water taps to "Hot" and open them. The water pump is turned on. The hot water pipes are filled with water.
- Keep the taps open until the water flowing out of the taps has no bubbles in it. This is the only way to ensure that the boiler is full of water.
- Set all water taps to "Cold" and leave them open. This will fill the cold water pipes with water.
- Keep the taps open until the water flowing out of the taps has no bubbles in it.
- Close all water taps.
- Check that the cap on the water tank is not leaking.

11 Sanitary fittings

11.5 Emptying the water system

▷ If the vehicle is not used for several days or if it is not heated when there is a risk of frost, empty the entire water system. Leave the water taps on in central position. Leave the safety/drainage valve (if available) and all drain cocks open. Frost damage to appliances, frost damage to the vehicle and deposits in water-carrying components can be avoided in this way.

▷ Take note of the environmental tips in this chapter.

To empty and ventilate the water system, proceed as follows. This will avoid frost damage:

- Position the vehicle horizontally.
- Switch off the 12 V power supply on the panel (Autark Package).
- Switch off the 240 V power supply on the 240 V automatic circuit breaker.
- Open all drain cocks.
- Take the cap off the cleaning opening of the water tank.
- Take out the stopper of the water tank.
- Open all water taps and set to the central position.
- Hang the shower handset up in the shower position.
- Take the cap off the opening for the water pump of the water tank.
- After fully emptying the system, drive a few kilometres so the remaining water can run out of the tank.
- Allow the pressure pump to run for approx. 1 minute to dry it.
- Empty the waste water tank. Take note of the environmental tips in this chapter.
- Empty Thetford cassette. Take note of the environmental tips in this chapter.
- Clean the water tank and then rinse it out thoroughly.
- Let the water system dry for as long as possible.
- After emptying, leave all water taps on in the central position.
- Leave all drain cocks open.

11 Sanitary fittings

11.6 Toilet compartment

- Do not transport loads in the shower tray. The shower tray or other items of equipment in the toilet compartment can otherwise be damaged.

- For ventilation purposes during or after a shower, and for drying wet clothing, close the toilet compartment door and open the toilet compartment window or skylight. This improves the air circulation.
- Close the shower curtain completely while showering, so that water cannot penetrate between the washroom wall and the shower tray.
- After taking a shower, rinse soap residue from the shower tray, otherwise cracks can appear in the shower tray over time.
- After using the shower, wipe it dry to prevent moisture from collecting.
- Further information about cleaning the toilet compartment can be found in Section 12.2.

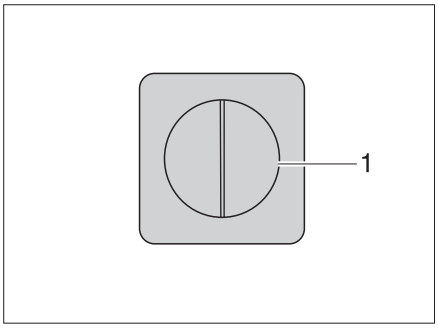

Fig. 138 Light switch

The switches for the toilet compartment lighting are installed in different places in the toilet compartment depending on the model.

For example, the light switch (Fig. 138,1) of the toilet compartment is located under the bathroom cabinet.

11.7 Toilet

- If there is any risk of frost and the vehicle is not heated, empty the sewage tank (cassette).
- Do not sit on the lid of the toilet. The lid is not designed to bear the weight of a person and could break.
- Use a suitable chemical for this toilet. The ventilation will merely remove the odour but not germs and gases. Germs and gases will have a detrimental effect on the sealing rubbers.

- Further information can be obtained in the manufacturer's instruction manual.

- Only empty the sewage tank (cassette) at disposal stations, at camping sites or caravan sites, that are especially provided for this purpose.

11 Sanitary fittings

11.7.1 Swivel toilet

The flushing of the Thetford toilet is fed directly from the water system of the vehicle. The toilet bowl can be moved into the optimal position.

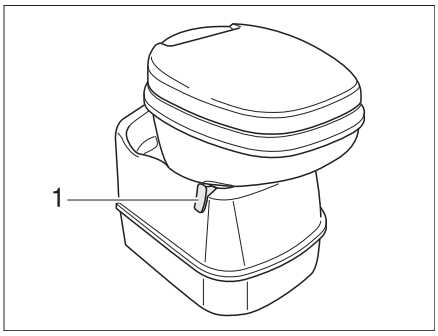

Fig. 139 Thetford toilet bowl, swiveling

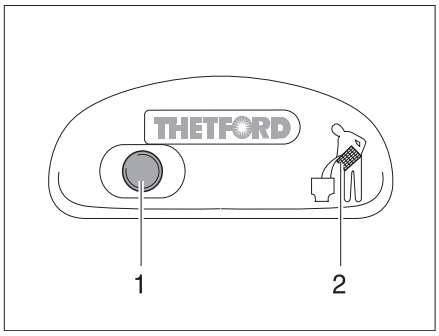

Fig. 140 Flush button/indicator lamp Thetford toilet

Flushing:

- Before flushing open the sliding trap of the Thetford toilet. To do this, push the slide lever (Fig. 139,1) anticlockwise.
- For flushing, press the blue flush button (Fig. 140,1).
- After flushing close the sliding trap. To do this push the slide lever in a clockwise direction.

The indicator lamp (Fig. 140,2) goes on whenever the Thetford cassette has to be emptied.

Emptying:

- Turn the slide lever (Fig. 139,1) clockwise. The sliding trap is closed. To empty, the sliding trap in the Thetford toilet **must** be closed.
- Remove the Thetford cassette and empty it as described in Sections 11.7.3 and 11.7.4.

11.7.2 Toilet with separate water tank

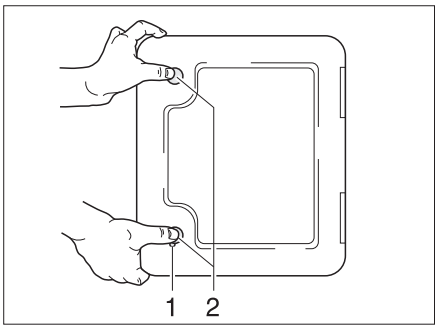

Fig. 141 Flap for Thetford cassette

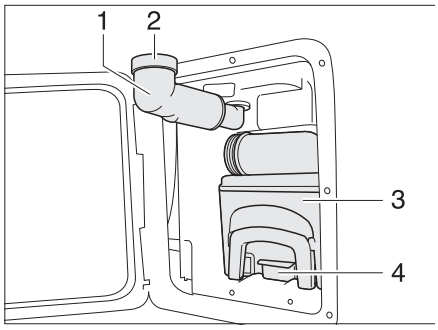

Fig. 142 Thetford cassette

The Thetford toilet is flushed via its own water tank, which is integrated in the toilet compartment.

The flap for the Thetford cassette (Fig. 141) is located on the outside of the vehicle.

11 Sanitary fittings

Filling the water tank:

- Insert key into locking cylinder of the push-button lock (Fig. 141,1) and turn a quarter turn clockwise.
- Remove the key.
- Press both push-button locks (Fig. 141,2) simultaneously with your thumb and open the flap for the Thetford cassette.
- Swing the fresh water filler neck (Fig. 142,1) towards the outside.
- Remove the screw cap (Fig. 142,2).
- Fill with fresh water until the fluid level reaches the top edge. This corresponds to approx. 15 l.
- Close the screw cap.
- Swivel the fresh water filler neck inwards.
- Close the flap for the Thetford cassette.

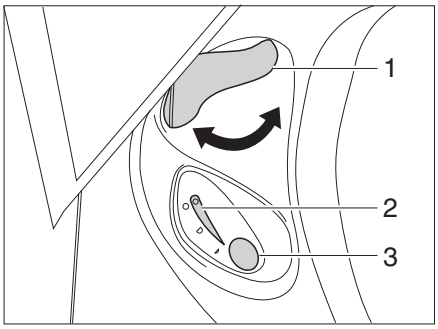

Fig. 143 Operating unit Thetford toilet

Flushing:

- Before flushing open the sliding trap of the Thetford toilet. To do this, turn the slide lever (Fig. 143,1) anticlockwise.
- For flushing, press the blue flush button (Fig. 143,3).
- After flushing close the sliding trap. To do this turn the slide lever (Fig. 143,1) clockwise.

The indicator lamp (Fig. 143,2) goes on whenever the Thetford cassette has to be emptied.

Emptying:

- Turn the slide lever (Fig. 143,1) clockwise. The sliding trap is closed. To empty, the sliding trap in the Thetford toilet **must** be closed.
- Remove the Thetford cassette and empty it as described in Sections 11.7.3 and 11.7.4.

Emptying the water tank:

- Open the sliding trap. To do this, turn the slide lever in an anticlockwise direction.
- Press the flush button until water ceases to flow into the bowl.
- Close the sliding trap. To do this turn the slide lever in a clockwise direction.
- Open the flap for the Thetford cassette.
- Swing the fresh water filler neck towards the outside.
- Remove the screw cap from the fresh water filler neck.
- Turn the fresh water filler neck in an anticlockwise direction until the residual water flows out.
- Turn the fresh water filler neck back in a clockwise direction.
- Screw the screw cap onto the fresh water filler neck.
- Swivel the fresh water filler neck inwards.

11.7.3 Removing the cassette

▷ The sewage tank (cassette) can only be removed when the sliding trap is closed.

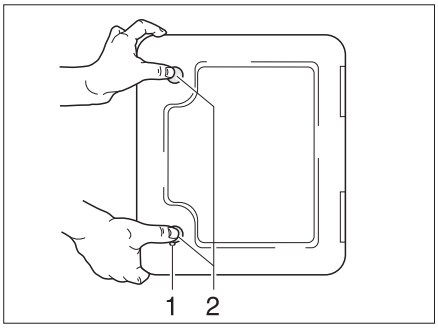

Fig. 144 Flap for the toilet cassette

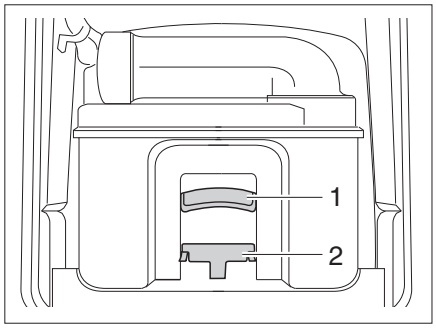

Fig. 145 Thetford cassette

- Open the flap for the cassette on the outside of the vehicle. Insert the key into the locking cylinder of the push-button lock (Fig. 144,1) and turn a quarter turn.
- Remove the key.
- Press both push-button locks (Fig. 144,2) simultaneously with your thumb and open the flap for the cassette.
- Pull the retaining clip (Fig. 145,2) forward to unlock the toilet cassette and pull out the cassette at the handle (Fig. 145,1).

11.7.4 Emptying the cassette

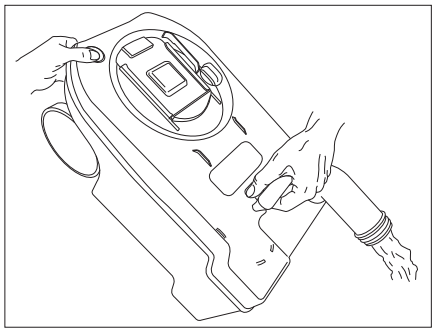

Fig. 146 Emptying the Thetford cassette

- Take the cassette to a disposal point especially provided for this purpose. As you do this, point the drainage neck upwards.
- If necessary, turn the drainage neck upwards.
- Remove the drainage neck cap.
- Point the cassette with the drainage neck downwards.
- For Thetford cassettes: Activate the aeration knob with your thumb. The cassette empties.
- Close the drainage neck with the cap.
- If necessary, return the drainage neck to its original position.
- Push the cassette back to its original position.
- Ensure that the cassette is secured by the retaining clip.
- Lock the flap for the cassette.

11 Sanitary fittings

12 Care

Chapter overview

This chapter contains instructions regarding the care of the vehicle.

The instructions address the following topics:

- exterior of the vehicle
- interior
- water system
- extractor hood
- air conditioning unit
- winter operation

At the end of the chapter there is a checklist of measures you must carry out if you are not going to use the vehicle for an extended period of time.

The checklist address the following topics:

- temporary lay-up
- winter lay-up
- start-up after a lay-up

12.1 External care

12.1.1 Washing with a high-pressure cleaner

▷ Do not clean the tyres with a high-pressure cleaner. The tyres might be damaged.

▷ Do not spray external applications (deco-films) directly with the high-pressure cleaner. The external applications could come off.

Before cleaning the vehicle with a high-pressure cleaner, observe the operating instructions of the high-pressure cleaner.

When cleaning with the nozzle for circular jet between the vehicle and the cleaning nozzle, maintain a minimum distance of approx. 700 mm.

Take into consideration that the jet of water comes out of the cleaning nozzle with pressure. The vehicle may be damaged by incorrect handling of the high-pressure cleaner. The temperature of the water should not be above 60 °C. Keep the jet of water in constant movement during the washing process. Do not direct the water jet at clearances, built-in electrical parts, plugs, seals, ventilation grills or skylights. The vehicle may be damaged or water may enter the interior.

12.1.2 Washing the vehicle

▷ Never have the vehicle cleaned in a car wash. Water can penetrate in the refrigerator grills, the waste gas vents, the ventilations of the extractor hoods or in the forced ventilations. The vehicle could be damaged.

- Wash the vehicle only on a washing site intended for this purpose. Avoid full sunshine. Observe environmental measures.
- Only clean external applications and synthetic parts with plenty of warm water, dish washing liquid and soft cloth.
- Wash down the vehicle with plenty of water, a clean sponge or a soft brush. In the case of stubborn dirt add dish washing liquid to the water.
- Painted exterior walls may also be cleaned with a caravan cleaner.

12 Care

- Clean surfaces made of glass-fibre reinforced plastic (GRP) only with mild cleansers. Cleaning agents and polishes for GRP surfaces are available in specialised stores.
- Add-on parts made of glass-fibre reinforced plastic (GRP) require a regular follow-up treatment with a polisher. This way these parts will not turn yellow and the sealing of the surface remains intact.
- Treat rubber seals of doors and storage flaps with talc.
- Treat locking cylinder of doors and storage flaps with graphite dust.

12.1.3 Windows of acrylic glass

Acrylic glass windows are delicate and require very careful handling.

- ▷ Never rub acrylic glass windows when dry as dust particles might damage the surface.
- ▷ Only clean acrylic glass windows with plenty of warm water, dish washing liquid and a soft cloth.
- ▷ Never use glass cleaning agents with chemical, abrasive or alcohol-containing additives. Premature brittleness of the panes and associated cracks may result from their use.
- ▷ Avoid contact of cleansing agents used for the body (e.g. tar- or silicone-removing agents) with acrylic glass.
- ▷ Do not drive into car wash units.
- ▷ Do not apply stickers to the acrylic glass windows.
- ▷ After cleaning the vehicle rinse the acrylic glass windows again with sufficient clear water.
- ▷ Treat rubber seals with glycerin.

- ▷ Acrylic glass cleanser with antistatic effect is suitable for a follow-up treatment. Small scratches can be treated with acrylic glass polish. These agents are available at the accessories shop.

12.1.4 Hot-dip galvanised chassis

Adhering salt damages the hot-dip galvanised chassis and can cause white rust.

However, so-called white rust is not a flaw. It is only an optical impairment.

The most common causes of white rust are:

- Gritting material and road salt (e.g. from journeys during winter)
- Condensation (e.g. by covering the vehicle with plastic films or tarpaulins)
- Humdity (e.g. by parking the vehicle in high grass, in puddles or mud)
- Cleansers (e.g. by cleaning with aggressive cleansers)
- Snow (e.g. by standing longer in snow)
- Insufficient ventilation (e.g. by covering with aprons in the underfloor area)

To avoid formation of white rust or to remove any existing white rust, we recommend the following method:

- After traveling in winter rinse the hot-dip galvanised surfaces with clear water.
- If hot-dip galvanised surfaces have white rust, clean the locations with a zinc cleaner (e.g. Poligrat).

12 Care

12.1.5 Underbody

The underbody of the vehicle is partly coated with an age-resistant underbody protection. Should the underbody protection be damaged, repair immediately. Do not treat areas coated with underbody protection with spray oil.

▷ Only use products approved by the manufacturer. Our authorised dealers and service centres will be happy to advise you.

12.1.6 Waste water tank

Clean the waste water tank after every use of the vehicle.

Cleaning:

- Open the cleaning opening on the waste water tank and the drain cock.
- Thoroughly rinse out the waste water tank with fresh water.

12.2 Internal care

▷ If possible, treat stains immediately.

▷ Acrylic glass windows are delicate and require very careful handling (see Section 12.1.3).

▷ Synthetic parts in the toilet and living area are very delicate and should be treated with care. Do not use solvents, alcohol-containing cleansers or scourers containing sand. This procedure will help you to avoid brittleness and formation of cracks.

▷ Do not pour any corrosive agents into the drain holes. Never pour boiling water directly into the drain holes. Corrosive agents and boiling water cause damage to drainage pipes and siphon traps.

▷ Do not use vinegar based products to clean the toilet and water system, or for decalcification of the water system. Vinegar-based products may cause damage to seals or parts of the installation. Use standard decalcifying products for decalcification.

▷ Save water. Mop up all remaining water.

▷ Vacuum off carpets and cushions with a suitable brush attachment.

▷ For information about the use of maintenance products, our representatives and service centres will be glad to advise.

▷ Check at an inconspicuous point whether the cleanser used is suitable for the surface to be cleaned.

- Surface and knobs of furniture, lamps and synthetic parts in the toilet and living area should be cleaned with water and a wool cloth. A mild cleanser may be added to the water. If necessary, treat finished surfaces with furniture polish.
- Clean upholstery with dry foam specially manufactured for the use on upholstery or with the foam of a mild detergent. Do not wash upholstery, only have them cleaned. Protect upholstery from direct sunlight so that it does not loose its colour.

12 Care

- Clean covers made of synthetic leather at least once a week with an absorbent cloth or sponge and with a mixture of water and mild lather. Wipe off with clear water, but do not use too much water.
  Clean stubborn stains with a mixture of alcohol and water (30% alcohol and 70% water) or with 10% diluted ethanol (10% ethanol and 90% water) and then with clear water. However marks may remain.
  Do not use solvent-based or scouring products, nor undiluted alcohol and/or acetone.
- Wipe off Teflon coverings with an absorbent cloth or sponge and use a mild household detergent.
  Never rub wet or oily stains. Instead, dab them with an absorbent cloth. Work from the outside to the inside to prevent spreading the stain.
  When treating solid or dried stains, always try to scrape them off with a dull knife or scraper or remove them off with a soft brush. Afterwards, dab off any residue with a moist cloth.
- Curtains and net curtains should be dry cleaned.
- Vacuum clean the carpet, if necessary clean with carpet shampoo.
- Clean PVC-floor covering with a mild, soapy cleanser for PVC floors. Do not place carpet on wet PVC-floor covering. The carpet and the PVC-floor covering may stick together.
- Never clean the sink or the gas cooker with a scourer. Avoid anything which may cause scratching or grooves.
- Clean gas cooker only with a moist cloth. Prevent any water from penetrating the gas cooker. Water may damage the gas cooker.
- Brush insect screens on doors, windows and skylights with a soft brush or vacuum with the brush attachment of the vacuum cleaner.
- Brush blinds with a soft brush or vacuum with the brush attachment of the vacuum cleaner. Grease or stubborn dirt may be removed with a mild soap at 30 °C (curd soap).
- Brush Roman shades with a soft brush or vacuum with the brush attachment of the vacuum cleaner. Grease or stubborn dirt may be removed with a mild soap at 30 °C (curd soap).

12 Care

12.3 Water system

12.3.1 Cleaning the water tank

- Clean the water tank with a plastic-compatible cleanser from specialised stores. Observe the manufacturer's instructions.

12.3.2 Cleaning the water pipes

▷ Use only suitable cleansers from specialised stores.

▷ Collect the exiting mixture of water and cleansers and dispose of it correctly.

- Empty the water system.
- Close all the drainage openings and drain cocks.
- Fill a mixture of water and cleanser into the water tank. Observe the manufacturer specifications for the mixing ration.
- Open the drain cocks individually.
- Leave the drain cocks open until the mixture of water and cleanser has reached the respective drain.
- Close the drain cocks again.
- Set all the water taps to "Hot" and open them.
- Leave the water taps open until the mixture of water and cleanser has reached the drain.
- Set all the water taps to "Cold" and open them.
- Leave the water taps open until the mixture of water and cleanser has reached the drain.
- Close all water taps.
- Flush the toilet several times.
- Let the cleanser act in accordance with the manufacturer specifications.
- Empty the water system. Collect the exiting mixture of water and cleansers and dispose of it correctly.
- To rinse fill the entire water system with drinking water and empty it again several times.

12 Care

12.3.3 Disinfecting the water system

▷ Use only suitable disinfectants from specialised stores.

▷ Collect the exiting mixture of water and disinfectant and dispose of it correctly.

- Empty the water system.
- Close all the drainage openings and drain cocks.
- Fill a mixture of water and disinfectant into the water tank. Observe the manufacturer specifications for the mixing ration.
- Open the drain cocks individually.
- Leave the drain cocks open until the mixture of water and disinfectant has reached the respective drain.
- Close the drain cocks again.
- Set all the water taps to "Hot" and open them.
- Leave the water taps open until the mixture of water and disinfectant has reached the drain.
- Set all the water taps to "Cold" and open them.
- Leave the water taps open until the mixture of water and disinfectant has reached the drain.
- Close all water taps.
- Flush the toilet several times.
- Let the disinfectant act in accordance with the manufacturer specifications.
- Empty the water system. Collect the exiting mixture of water and disinfectants and dispose of it correctly.
- To rinse fill the entire water system with drinking water and empty it again several times.

12 Care

12.4 Extractor hood

▶ Prior to carrying out work on the device, turn off the power supply.

Clean the grease filter of the range hood occasionally. How often cleaning is necessary depends on how often the range hood is used. Do not wait to clean the filter until the performance of the range hood has noticeably decreased.

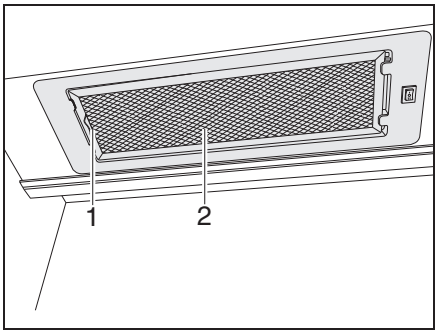

Fig. 147 Extractor hood

Cleaning grease filter:

- Push the lever (Fig. 147,1) to the inside.
- Remove the filter (Fig. 147,2) downwards.
- Wash the filter with warm water and some washing-up liquid.
- Let the filter dry completely and re-install it.
- Insert the filter upwards and latch it in.

12.5 Sink

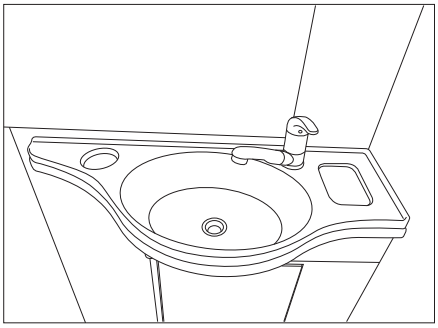

Fig. 148 Sink

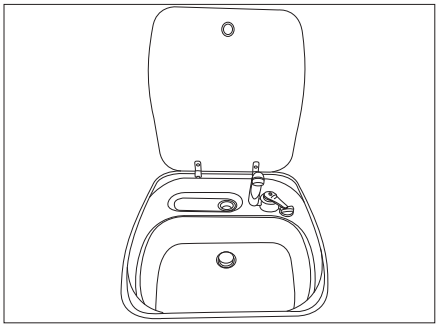

Fig. 149 Sink

12 Care

12.5.1 Stainless-steel sink

- ▷ Do not use bleaches, products containing chloride or hydrochloric acid, baking soda or silver polish for cleaning.
- ▷ Do not use scouring milk or rough sponges.

- ▷ Before cleaning check at an inconspicuous point whether the cleanser used is suitable for the surface.
- ▷ After cleaning the surfaces, wipe thoroughly dry to avoid traces of lime.
- ▷ With brushed stainless-steel surfaces, wipe in the same direction as the polish.

Removing stubborn soiling:

- ■ Clean the sink with a common household sponge and cleansing milk.
- ■ Rinse out the sink and dry it with household cloths.

Removing greasy and oily residue:

- ■ Saturate a kitchen cloth in some white spirits and rub the sink with it.
- ■ Rinse out the sink and dry it with household cloths.

Removing fingerprints:

- ■ Clean the sink with a cleaning solution and a leather cleaning cloth.
- ■ Rinse out the sink and dry it with household cloths.

12.5.2 Plastic sink

- ▷ Do not use microfibre cloths for cleaning. Fine scratches could be created here.
- ▷ Do not use scouring milk/scouring powder or rough sponges.

- ▷ Before cleaning check at an inconspicuous point whether the cleanser used is suitable for the surface.
- ▷ After cleaning the surfaces, wipe thoroughly dry to avoid traces of lime.

Removing normal soiling:

- ■ Clean the sink with a conventional cleaning solution or non-scouring household cleaner.

Removing stubborn soiling:

- ■ Apply spot salt or dishwasher salt with a moist sponge and allow it to work in for several hours.
- ■ Remove salt and clean sink with a food-safe plastic cleaner.
- ■ Rinse out sink.

Removing lime deposits:

- ■ Clean the sink with vinegar or lime remover.
- ■ Rinse out sink.

12 Care

12.6 Winter care

De-icing salt damages the underbody and the parts open to water spray. We recommend that you wash the vehicle more frequently during wintertime. Mechanical and surface treated parts and the underside are under particular strain, and should therefore be cleaned thoroughly.

- ▷ If there is any risk of frost, always run heater at a minimum of 15 °C. Set the circulation fan (if existing) to automatic mode. In the case of extreme external temperatures, the furniture flaps and doors should be left slightly open. The inflowing warm air can help prevent the freezing of water pipes, for example, and counteract the formation of condensation in the storage spaces.
- ▷ If there is any risk of frost, cover the outside surface of the windows with winter insulation mats.
- ▷ Keep the waste gas vent, skylights with forced ventilation and mushroom-shaped vents free of snow. In the case of a roof waste gas vent use a vent extension that is at least 10 cm long.

12.6.1 Preparations

- Check the vehicle for paint and rust damage. Repair damage as necessary.
- Make certain that water cannot penetrate the automatic floor ventilation system and the heater.
- Use a wax-based rust inhibitor to protect the metal parts of the underbody.
- Use appropriate protection for external painted surfaces.

12.6.2 Winter operation

During winter operation, condensation develops when the vehicle is occupied under low-temperature conditions. To ensure good interior air quality and avoid vehicle damage from condensation, sufficient ventilation is essential.

- Attach vent extension with a length of at least 10 cm.
- When heating the vehicle, the heater should be at the highest setting and roof storage cabinets, curtains and blinds should be opened. This ensures optimal ventilation.
- If the vehicle is equipped with a circulation fan, always switch the fan on when the heater is on. There is danger of overheating for the heater!
- In the morning, lift up all cushions, air out storage boxes and dry any damp areas.

- ▷ If condensation has still developed, just wipe it off.

12.6.3 At the end of the winter season

- Thoroughly clean the underbody. When this is done, corrosion-inducing anti-freeze agents (salts, alkaline residues) are removed.
- Clean the exterior and use regular car wax to protect metal surfaces.
- Remove vent extension.

12 Care

12.7 Lay-up

12.7.1 Temporary lay-up

- If the vehicle has been stationary for a long period (approx. 10 months) have the braking and gas systems checked by an authorised specialist workshop.
- Take into consideration that water is undrinkable after only a short time.
- Animal damage to cables can lead to short circuits. Fire hazard!

Animals (especially mice) can cause great damage to the interior of the vehicle. This is especially true if the animal remains undisturbed in a parked vehicle.

The animals can get into the vehicle at an opportune moment and hide from view.

To keep damages from animals to a minimum or to avoid them altogether, regularly check the vehicle for damage or animal traces. This is especially important approx. 24 hours after parking the car in storage.

If animal traces are found, contact your authorised dealer or service centre. If damage to cables has occurred, they can result in short circuits. The vehicle could catch fire.

Before laying up the vehicle, go through the following checklist:

	Activities	Done
Chassis	Lubricate the moving parts of the caravan coupling ▶ Do not lubricate the friction pads on the stabiliser!	
	Jack up caravan with suitable support so that the wheels do not bear any load, or move caravan every four weeks. This prevents any pressure points from occurring on tyres and wheel bearings ▷ Never use the fitted corner steadies as a car jack but only external support.	
	Protect the tyres from direct exposure to the sun. Danger of formation of cracks!	
	Inflate tyres up to the recommended maximum pressure	
	Always provide for sufficient ventilation in the underbody area ▷ Humidity or lack of oxygen e.g. by covering with plastic film may cause optical irregularities to the underbody.	
Body	All vents should be sealed with the appropriate caps and all other openings (apart from forced ventilations) should also be sealed. This prevents animals (e.g. mice) from gaining entry	
	In order to avoid the formation of condensation and thus mould, ventilate the interior, all the storage areas accessible from the outside and the parking space (e.g. garage) every 3 weeks	
Interior	Place upholstery in an upright position for ventilation, and cover	
	Clean refrigerator	
	Allow refrigerator and freezer compartment doors to remain slightly open	
	Search for traces of animals that have gained entry	
	Disconnect the flat screen from the mains and, if necessary, remove it from the vehicle	

	Activities	Done
Gas system	Close regulator tap on the gas bottle	
	Close all gas isolator taps	
	Always remove gas bottles from the gas bottle compartment, even if they are empty	

Electrical system	Fully charge living area battery ▷ Charge the battery for at least 24 hours before laying up.	
	Spray the contacts on the thirteen-pin connector with contact spray	

Water system	Empty the entire water system. Leave the water taps on in central position. Leave the safety/drainage valve (if available) and all drain cocks open. Observe the notes in Chapter 11	

12.7.2 Winter lay-up

Additional measures are required if laying up the vehicle over winter:

	Activities	Done
Chassis	Clean body and underbody thoroughly and spray with hot wax or protect with varnish	
	Repaint paint damage	
	Inflate tyres up to the recommended maximum pressure	

Body	Keep the forced ventilation open	
	Clean installed corner steadies and spray with conventional Teflon spray.	
	Clean and grease all door and flap hinges	
	Brush oil or glycerine on all locking mechanisms	
	Rub all rubber seals with talc	
	Use graphite dust to treat locking cylinders	

Interior	Position de-humidifiers	
	Remove upholstery from the vehicle and store in a dry place	
	Air the interior at regular intervals	
	Empty all cabinets and storage compartments, open flaps, doors and drawers	
	Thoroughly clean the interior	
	If there is a risk of frost, do not leave the flat screen in the vehicle	

Electrical system	Remove living area battery and store in a place protected from frost (see Chapter 9)	

Water system	Clean the water system using a cleaning agent from a specialised store	

	Activities	Done
Complete vehicle	Clean the awning area and store in a dry place	
	Arrange the tarpaulins in such a way that the ventilation openings are not covered, or use porous tarpaulins	

12.7.3 Starting up the vehicle after a temporary lay-up or after lay-up over winter

Go through the following checklist before start-up:

	Activities	Done
Chassis	Check the tyre pressure on all tyres	
	Check the tyre pressure and condition of the spare wheel. The spare wheel has to be replaced every 5-6 years.	
Body	Check the functioning of the fitted corner steadies	
	Check that the doors, windows and skylights are working properly	
	Check the function of all external locks	
	Remove the cover from the waste gas vent of the heater (if there is one)	
	Remove the winter cover from the refrigerator grills (if there is one)	
Gas system	Put the gas bottles in the gas bottle compartment, tie down and connect to the gas pressure regulator	
Electrical system	Connect to 240 V external power supply	
	Fully charge living area battery ▷ Charge at least for 24 hours after laying up	
	Check that the electrical system are working, e.g. interior light, socket and all installed electrical appliances	
Water system	Disinfect water pipes and water tank	
	Close all drain cocks and water taps	
	Check the water taps, drain cocks and water distributors for leaks	
Appliances	Check the function of the refrigerator	
	Change heating fluid of the hot-water heater every 2 years	
	Check the function of the heater/boiler	
	Check the function of the gas cooker	
	Check the function of the air conditioning unit	
	Check the function of the oven	

13 Maintenance

Chapter overview

This chapter contains instructions about official inspections as well as inspection and maintenance work concerning the vehicle.

The maintenance instructions address the following topics:

- stabiliser
- braking system
- alde hot-water heater
- replacing bulbs and fluorescent tubes

At the end of the chapter you will find important instructions on how to obtain spare parts.

13.1 Inspection work

Like any technical appliance, the vehicle must be inspected at regular intervals.

This inspection work must be carried out by qualified personnel.

Special technical knowledge, which cannot be taught within the framework of this instruction manual, is required for these tasks. Personnel possessing this technical knowledge are available for assistance at all service centres. Their experience and regular technical instruction by the factory as well as equipment and tools guarantee expert and up-to-date inspection of the vehicle.

The service centre in charge will confirm the work performed.

- ▷ Observe the inspections specified by the manufacturer and have them carried out at the specified intervals. The value of the vehicle is thus preserved.
- ▷ The confirmation of the inspection work carried out also serves as valid proof in the case of damage and claims under the guarantee.

13.2 Maintenance work

As with every machine, this vehicle requires maintenance. The extent and frequency of the maintenance work required depend on conditions of operation and use. More difficult operating conditions make it necessary to service the vehicle more often.

Have the appliances serviced at the intervals specified in the corresponding instruction manuals.

13 Maintenance

13.3 Stabilisers

Clean the stabiliser and the coupling head regularly. Use either thinners or white spirit. When lubricating the stabiliser ensure that no lubricant is on the friction pads.

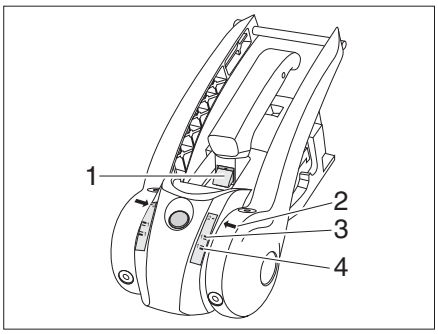

Fig. 150 Friction control of friction lining

Friction control of friction lining

Prerequisite: The stabiliser is connected and the stabiliser handle bar is pressed down until you meet resistance.

- If the green marking (Fig. 150,1) is visible, the friction linings at the front and back are OK. If the green marking is no longer visible, the friction linings have to be replaced.
- If the arrow (Fig. 150,2) is below the softdock marking 1-green (Fig. 150,4), the friction linings on the right and left are OK. If the arrow (Fig. 150,2) is above the softdock marking 1-red (Fig. 150,3), the friction linings have to be replaced.

▷ Resetting the friction pads is not required.

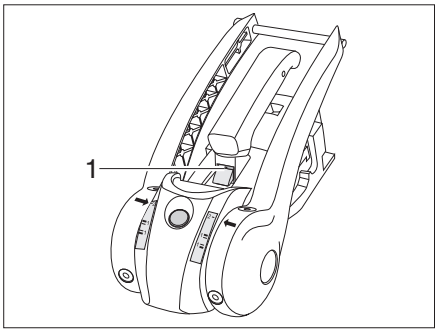

Fig. 151 Wear indication

Friction control of coupling ball and coupling mechanism

Prerequisite: The stabiliser is connected.

- Drive approx. 500 m with the towing vehicle (stabilising device deactivated).
- Check the condition at the wear indication:

- If the green marking (Fig. 150,1) is visible, the coupling ball is OK. If the green marking is no longer visible, the diameter of the coupling ball < 49 mm and the coupling ball has to be replaced.

13 Maintenance

13.4 Braking system AL-KO chassis

▷ Have maintenance work on the braking system carried out by a specialist workshop. See “Inspection plan for chassis” on page 13.

Look up the following table for the inspection deadlines.

Model	First inspection	Braking system	Brake lining
AL-KO chassis	After 1500 km or after 6 months	Every 10000 to 15000 km or every 12 months	Every 5000 km or every 12 months

13.5 Alde hot-water heater

▷ Check the level of the heating fluid regularly on the compensator reservoir.

▷ During or after the first operating hours of the hot-water heater, the filling level may fall below the minimum mark. If this is the case, top up the heating fluid.

▷ We recommend bleeding the heating system after the initial heater operation to checking the glycol content.

▷ Have heating fluid changed by an authorised dealer or a service centre at intervals of approximately two years as corrosion-protection wears off after some time.

▷ Top up heating system with a water-glycol mixture (60 : 40) only. This mixture offers frost protection up to approx. -25 °C.

▷ Further information can be obtained in the manufacturer's instruction manual.

13.5.1 Checking the fluid level

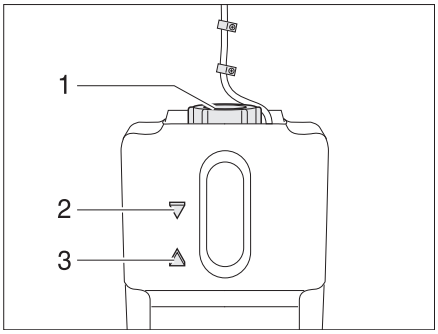

Fig. 152 Compensator reservoir hot-water heater

- Switch off the hot-water heater and allow it to cool down.
- Check if the fluid level is between the marks "MIN" (Fig. 152,3) and "MAX" (Fig. 152,2) on the compensator reservoir (Fig. 152).
- Replace the fluid every 2 years.

13.5.2 Topping up the heating fluid

▷ The heating fluid has to be renewed every 2 years.

- Position the vehicle horizontally. This prevents formation of bubbles.
- Switch off the hot-water heater and allow it to cool down.
- Unscrew or remove the panel.
- Unscrew the screw cap (Fig. 152,1) at the compensator reservoir.
- Slowly remove the cover with circulating pump upwards.
- Check anti-freeze with an anti-freeze hydrometer. The frost protection content must be 40% or provide frost protection of up to -25 °C.
- Fill the water frost protection mixture slowly into the compensator reservoir.

▷ The optimum fluid level is reached when the fluid in the compensator reservoir is 1 cm above the "MIN" mark.

13.5.3 Bleeding the heating system

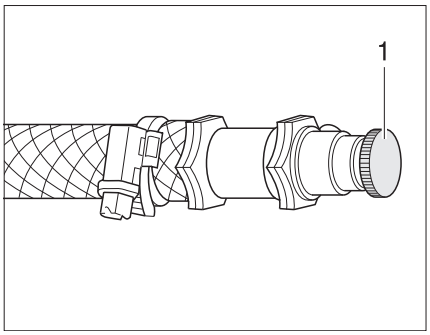

Fig. 153 Bleeding valve of hot-water heater

The bleeding valves are built in nearby the radiators.

- Switch off the hot-water heater and allow it to cool down.
- Open the bleeding valve (Fig. 153,1) and leave it open until no more air escapes.
- Close bleeding valve.
- Repeat this procedure at all bleeding valves.
- Check to see if the hot-water heater warms up.

13 Maintenance

13.6 Air conditioning unit

▶ Prior to carrying out work on the device, turn off the power supply.

- ▷ Never operate the air conditioning unit without a lint filter. Without a lint filter the evaporator becomes soiled, resulting in the performance of the air conditioning unit being impaired.
- ▷ If the condensation drain is clogged, condensate can enter the vehicle. Keep the condensation drain free of dirt, leaves and similar obstacles.

13.6.1 Air conditioning unit (Teleco)

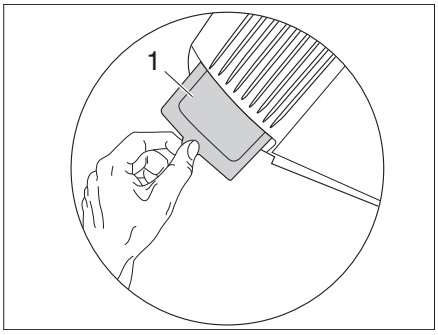

Fig. 154 Lint filter air conditioning unit

A lint filter (Fig. 154,1) for the air circulation suction system is located at the rear of the air conditioning unit. The lint filter must be cleaned at regular intervals, at least twice a year however, and replaced if necessary.

Pull the lint filter out of the air conditioning unit, clean it or replace it if necessary.

The condensation drain is under the floor of the vehicle. Keep the drain hose free from dirt, leaves or similar to allow the condensation to be drained.

13.6.2 Air conditioning unit (Dometic)

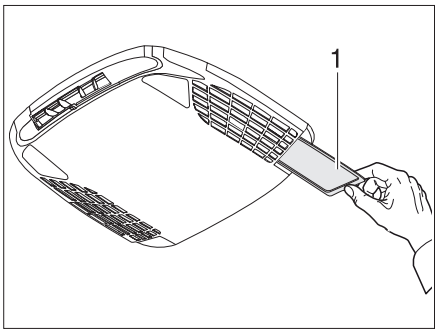

Fig. 155 Lint filter air conditioning unit

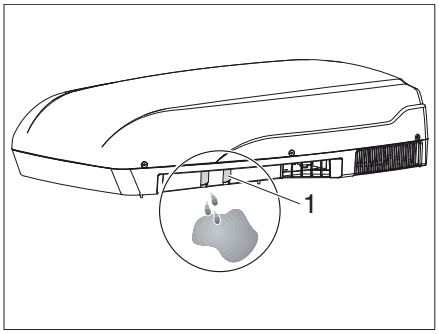

Fig. 156 Condensation drain of air conditioning unit

A lint filter (Fig. 155,1) for the air circulation suction system is located on the bottom of the air conditioning unit on both sides. The lint filter must be cleaned at regular intervals, but at least twice a year.

Pull the lint filter out of the air conditioning unit, clean it using a detergent solution, let it dry completely and place it back in.

13 Maintenance

Check whether the condensation drain holes (Fig. 156,1) are free and if necessary clean at regular intervals.

13.7 Replacing bulbs and fluorescent tubes

- Bulbs and light fittings can be extremely hot. Therefore, allow lights to cool down before changing bulbs.
- Before changing bulbs, switch off the power supply at the safety cut-out in the 240 V fuse box.
- Store bulbs in a safe place inaccessible to children.
- Do not use any bulb that has been dropped or which shows scratches in its glass. The bulb might burst.
- Lights can get very hot. WHen the light is switched on, a safety distance of 30 cm to combustible material has to be maintained. Fire hazard!

- New bulbs should not be touched with the fingers. Use a cloth when inserting the new bulb.
- Only use bulbs of the same type and with the correct wattage.
- If LEDs in the lights are defective, contact an authorised dealer or a service centre.

13.7.1 Halogen spotlight

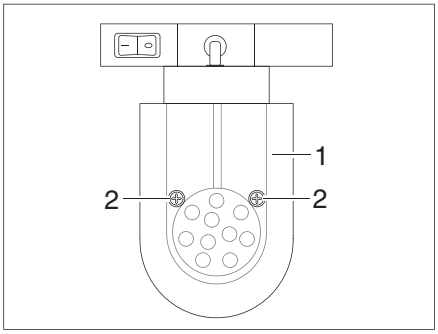

Fig. 157 Halogen spotlight (movable)

Changing bulbs:

- Loosen the fixing screws (Fig. 157,1).
- Carefully remove the lamp chalice (Fig. 157,2) from the holder.
- Remove halogen bulb.
- Put in a new halogen bulb.
- Reassemble the lamp in the reverse order.

13.7.2 Recessed halogen light with housing

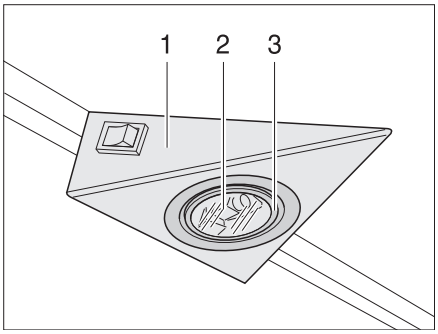

Fig. 158 Recessed halogen light

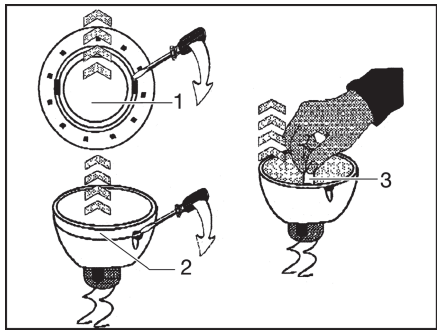

Fig. 159 Changing the halogen bulb

The recessed halogen light is installed flush in a housing (Fig. 158,1).

Changing bulbs:

- Use a suitable tool (e.g. screwdriver) to remove the inner cover ring (Fig. 158,3 or Fig. 159,1) from the housing.
- Remove the cover ring with the glass (Fig. 158,2).
- Remove the halogen bulb (Fig. 159,2).
- Put in a new halogen bulb.
- Reassemble the lamp in the reverse order.

13.7.3 Children's bed lamp

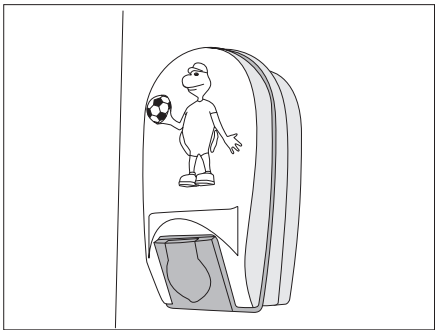

Fig. 160 Children's bed lamp

Changing bulbs:

- Press the light covering of the children's bed lamp (Fig. 160) lightly together and remove it.
- Remove halogen bulb.
- Insert a new halogen bulb of the same type and the same size (5 W with pin base).
- Press the light covering lightly together and put in on.

13.8 Wardrobe light with LED

The LED of the wardrobe light is supplied with power by 3 batteries of the type AA/ LR6/R6 ("Mignon").

▷ Use only batteries of the same type.

13 Maintenance

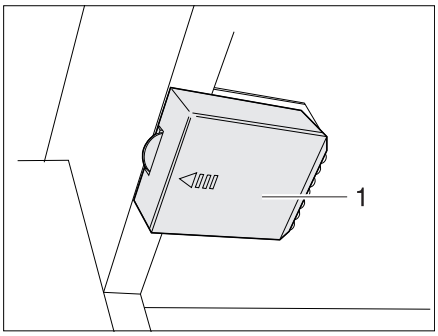

Fig. 161 Wardrobe light with LED, battery compartment closed

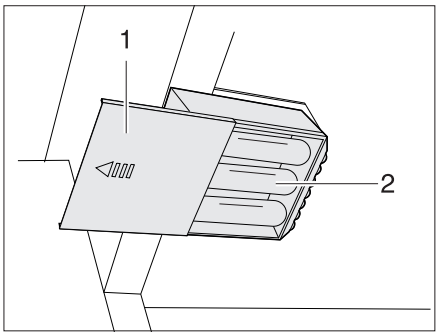

Fig. 162 Wardrobe light with LED, battery compartment opened

Changing the batteries:

- Push the cover (Fig. 161,1) in the direction of the arrow.
- Remove the batteries from the battery holder.
- Insert new batteries of the same type, observing the correct polarity (+/-) (Fig. 162,2).
- Push the cover (Fig. 162,1) back on.

13.9 Vehicle identification plate

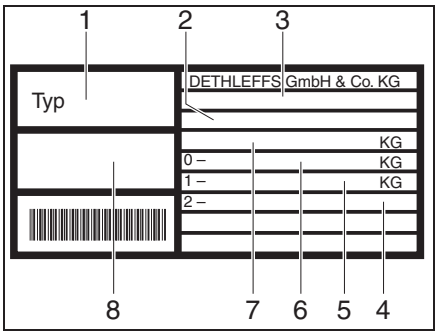

1 Type
2 Vehicle identification number
3 EC type approval number
4 Permissible axle load axle 2
5 Permissible axle load axle 1
6 Permissible nose weight
7 Maximum permissible gross weight of the vehicle
8 Serial number

Fig. 163 Vehicle identification plate

Depending on the model, the vehicle identification plate (Fig. 163) with the vehicle identification number is attached in the gas bottle compartment or in the front storage area.

Do not remove the vehicle identification plate. The vehicle identification plate:

- Identifies the vehicle
- Helps with the procurement of spare parts
- Together with the vehicle documents identifies the vehicle owner

Always include the **vehicle identification number** with all inquiries for the customer service office.

13.10 Warning and information stickers

There are warning and information stickers on and inside the vehicle. Warning and information stickers are for the sake of safety and must not be removed.

▷ Replacement stickers can be obtained from an authorised dealer or the service centre.

14 Spare parts

Chapter overview

This chapter contains important instructions on how to obtain spare parts.

- Every alteration of the original condition of the vehicle can alter road behaviour and jeopardize road safety.
- The special equipment and original spare parts recommended by Dethleffs have been specially developed and supplied for your vehicle. These products are available at the authorised dealers or service centres. The authorised dealers or service centres are informed about admissible technical details and carries out the required work correctly.
- The use of accessories, parts and fittings not supplied by Dethleffs may cause damage to the vehicle and jeopardize road safety. Even if an expert's report, a general type approval or a design certification exists, there is no guarantee for the proper quality of the product.
- No liability can be assumed for damage caused by products which have not been approved by Dethleffs. This also applies to impermissible alterations to the vehicle.

For safety reasons, spare parts for pieces of equipment must correspond with manufacturer's instructions and be permitted by the manufacturer as a spare part. These spare parts may only be fitted by the manufacturer or an authorised specialist workshop. The authorised dealers and service centres are available for any spare parts requirement.

Here are some suggestions of important spare parts:

- Fuses
- Bulbs
- Water pump (submerged pump)

When ordering spare parts, please indicate the serial number and the vehicle type to the authorised dealer or service centre.

The vehicle described in this instruction manual is built and equipped to factory standards. Special equipment is offered depending on its purpose or use. When fitting special equipment check if such equipment has to be entered in the vehicle documents. Observe the max. permissible gross weight. The authorised dealer or service centre will be happy to advise you.

14 Spare parts

15 Wheels and tyres

Chapter overview

This chapter contains instructions regarding the tyres of the vehicle.

The instructions address the following topics:

- tyre selection
- handling of tyres
- changing wheels
- spare wheel support
- tyre pressure

At the end of the chapter there is a table you can use to find the correct tyre pressure for your vehicle.

15.1 General

- ▶ Check the tyre pressure before a journey and at 2-week intervals. Wrong tyre pressure causes excessive wear and can lead to damage or even to tyre burst. You can lose control of the vehicle.
- ▶ Check the tyre pressure and condition of the spare wheel at regular intervals. Danger of accidents if a spare wheel that is no longer suitable for use is used!

- ▷ Only check the tyre pressure on cold tyres.
- ▷ Tubeless tyres are mounted on the vehicles. Never mount tubes in these tyres.
- ▷ Snow chains may only be used if this is permitted by a further stipulation in the expert's report.

- ▷ In the case of a puncture, pull over to the side of the road. Make vehicle and caravan safe with a hazard warning triangle. Switch on the warning lights.
- ▷ Tyres on vehicles with tandem axles may wear faster due to the characteristics of the axle.
- ▷ Tyres must not be older than 6 years as the material will become brittle over time. The four-digit DOT number on the tyre flank indicates the date of manufacture. The first two digits designate the week, the last two digits the year of manufacture.

  Example: (1509) Week 15, year of manufacture 2009.

Note:

- ■ Check the tyres regularly (every 2 weeks) for equal tread wear, tread depth and external damage.
- ■ Replace tyres at the latest, when the minimum depth of tread stipulated by law is reached.
- ■ Always use tyres of the same model, same brand and same type (summer and winter tyres).
- ■ Only use tyres approved for the wheel rim type fitted. The permitted rim and tyre sizes are specified in the vehicle documents and the authorised dealer or service centre will always be glad to give you advice.
- ■ Special wheels may only be balanced with adhesive weights on the inside below the drop-centre and the inner flange.
- ■ Run-in new tyres for approx. 100 km (60 miles) at low speed since only then do they reach full strength.

15 Wheels and tyres

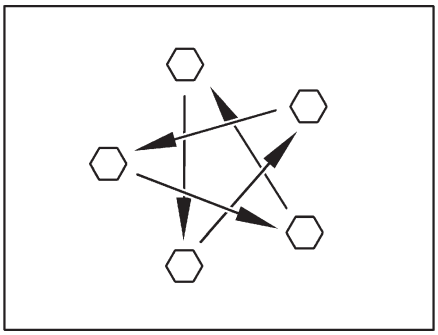

Fig. 164 Tighten the wheel nuts or wheel bolts cross-wise

- Check regularly that the wheel nuts or wheel bolts are firmly seated. Re-tighten the wheel bolts of a changed wheel cross-wise after 50 km (30 miles) (Fig. 164). See Section 15.5.2 for tightening torque.
- When using new or newly painted rims, re-tighten the wheel nuts or wheel bolts once again after approx. 1000 to 5000 km (600 miles to 3000 miles).
- For lay-ups or long periods of inactivity, keep the tyres and tyre bearings free from pressure points:
  Jack up the vehicle so that the wheels do not bear any load, or move the vehicle every 4 weeks in such a way that the position of the wheels is changed.
- Replace the spare wheel every 5-6 years.

15.2 Tyre selection

▶ The wrong tyre choice can lead to damage to the tyres or even to tyres bursting.

▷ If tyres that are not approved for the vehicle are used, then the type approval for the vehicle and subsequently the insurance coverage can lapse. The authorised dealer or service centre will be happy to advise you.

The tyre sizes approved for the vehicle are given in the vehicle documents or can be obtained from the authorised dealers or service centres. Each tyre must fit the vehicle on which it will be driven. This applies to the external dimensions (diameter, width), which are indicated with the standardised size designations. In addition, the tyres must meet the requirements of the vehicle with regard to weight and speed.

Weight refers to the maximum permissible axle load which can be distributed on two tyres (do not load unevenly or one-sided). The maximum load-carrying capacity of a tyre is indicated by its load index (= LI, load index code).

The maximum permissible speed for a tyre (with full load-carrying capacity) is indicated by the speed index (= SI). Together, load index and speed index form the operating code of a tyre. This is an official component of the complete, standardised dimensions description which appears on every tyre. The information on the tyres must correspond to the specifications which appear in the vehicle papers.

15 Wheels and tyres

15.3 Tyre designations

215/70 R 15C 109/107 Q

Designation	Explanation
215	Tyre width in mm
70	Height-to-width proportion in percent
R	Tyre design (R = radial)
15	Rim diameter in inches
C	Commercial (transporter)
109	Load index code for single tyres
107	Load index code for twin tyres
Q	Speed index (Q = 160 km/h)

15.4 Handling of tyres

- Drive over kerbs at an obtuse angle. Otherwise the flanks of the tyres may get pinched. Driving over a kerb at a sharp angle can damage the tyre and result in it getting ruptured.
- Drive over high manhole covers at a slow speed. Otherwise the tyres may get pinched. Driving over a high manhole cover at high speed can damage the tyre and result in it getting ruptured.
- Check the shock absorbers regularly. Driving with poor shock absorbers significantly increases wear.
- Avoid block brakings. A block braking gives the tyres "brake plates" of varying strength, thus reducing travelling comfort and possibly rendering the tyres unusable.
- Do not clean the tyres with a high-pressure cleaner. The tyres can suffer serious damage within just a few seconds and rupture as a result.

15 Wheels and tyres

15.5 Changing wheels

15.5.1 General instructions

The spare wheel is in the drawbar box. Use a commercial scissors-type jack to change the wheel.

- The vehicle must be on level, firm ground, secure from slipping.
- Before jacking up the vehicle firmly apply the handbrake.
- Prevent the vehicle from rolling away by blocking the opposite wheel with the wheel chocks.
- Under no circumstances jack the vehicle with the fitted steady legs.
- Position the vehicle jack underneath the axle, not under any circumstances on the bodywork.
- Never overload the vehicle jack. The maximum permissible load is specified on the vehicle jack's identification plate.
- Use the jack only to lift the vehicle briefly while changing the tyre.
- Persons may not lie under a vehicle that is jacked up.
- If alloy wheels rims are in use and a steel spare wheel is mounted after a puncture: Do not drive any further than necessary (car dealer, car workshop, tyre dealer). Only drive at a suitable speed. The different wheels affect driving handling.

- Do not damage the thread of the thread bolts when changing the wheel.
- Tighten the wheel nuts or wheel bolts cross-wise (Fig. 164).
- When changing wheels (e.g. light metal wheel rims or wheels with winter tyres), use the correct wheel bolts of the correct length and shape. The firm seating of the wheels and the function of the braking system depend on this.
- Wheel rims and tyres not permitted for use with the vehicle can jeopardise road safety.

- Protect the vehicle according to national regulations, e.g. with a hazard warning triangle.
- Before changing the wheel, check the wheel rim and tyre size, the max. tyre load and the speed index on the tyres. Only use the wheel rim and tyre sizes stated in the vehicle documents.

15.5.2 Tightening torque

Wheel rim	Tightening torque
Steel wheel rim	90 Nm
Alloy wheel rim	110 Nm

15.5.3 Changing a wheel

- The base of the vehicle jack must stand evenly on the ground.
- Do not tilt the vehicle jack.
- Always push in the insert profile of the AL-KO vehicle jack (special equipment) into the receiving pocket until it stops.

- A special vehicle jack from AL-KO with receiving pockets is available as special equipment. These receiving pockets are mounted on the frame.
- The AL-KO vehicle jack has a load-carrying capacity of 800 kg.
- You should always have a spare wheel that is ready to use on hand. Therefore always have a replaced wheel repaired immediately.
- Take note of the general tips in this chapter.

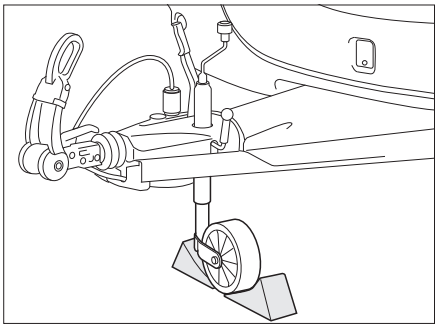

Fig. 165 Securing support wheel

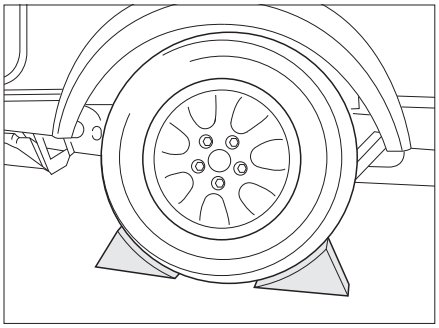

Fig. 166 Securing vehicle

Preparing the connected caravan:

- Loosen the stabilising device in caravan couplings with stabilising devices. Otherwise the friction pads will be highly loaded.
- Pull the handbrake of the towing vehicle and go to first gear or reverse gear.

Preparing the disconnected caravan:

- Park the vehicle on as even and stable a surface as possible.
- Apply the handbrake.
- Place the support wheel diagonal to the direction of travel and secure with suitable tools (Fig. 165).

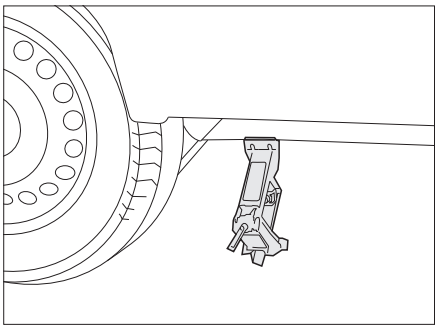

Fig. 167 Commercial vehicle jack

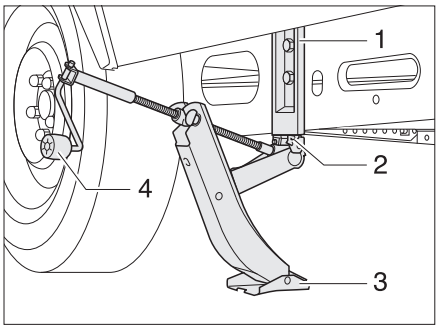

Fig. 168 AL-KO vehicle jack

Changing the wheel:

- Place chocks or other appropriate objects beneath the opposite wheel of the vehicle to secure it (Fig. 166).
- Remove the spare wheel from the spare wheel support.
- If the ground is soft, place a stable support such as a wooden board beneath the vehicle jack.
- Commercial vehicle jack:
  Position the commercial scissors-type jack (Fig. 167) or hydraulic vehicle jack on the frame or on the axle.
- AL-KO vehicle jack:
  Always push in the insert profile (Fig. 168,2) of the AL-KO vehicle jack into the receiving pocket (Fig. 168,1) until it stops.
- AL-KO vehicle jack:
  Hold the AL-KO vehicle jack with one and and with the other hand turn the hand crank (Fig. 168,4) clockwise until the base (Fig. 168,3) has ground contact and is level.
- Turn the wheel bolts several times to loosen them, but do not remove them!
- Lift the vehicle until the wheel has been lifted 2 to 3 cm above the ground.
- Remove the wheel bolts and take off the wheel.
- Place the spare wheel on the wheel hub and adjust.
- Screw in the wheel bolts and slightly tighten them cross-wise.
- Crank down the vehicle jack and remove it.
- Using the wheel brace , tighten the wheel bolts evenly. The target value of the tightening torque of the wheel bolts is 90 Nm for steel wheel rims or 110 Nm for alloy wheel rims.

15.5.4 Changing the wheel at alloy wheel rims

- The resting surfaces of the wheels on the break drums must be clean and free of burrs.
- First tighten the wheel lightly with the enclosed fastening parts and ensure that they are positioned optimally and can move smoothly. Then tighten the wheel bolts cross-wise using a torque spanner.
- At various axle versions there are no centring aid, no collar and no bolts. Take care that the wheel bolts are centred evenly across the bolt circle (no tilting).

15 Wheels and tyres

15.6 Spare wheel support

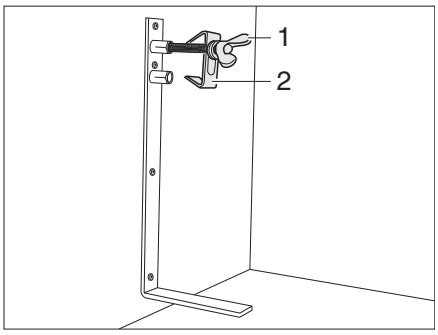

Fig. 169 Spare wheel support

The spare wheel support is fitted as standard in the gas bottle compartment. The spare wheel is available for a surcharge.

Removing the spare wheel:

- Loosen the screw (Fig. 169,1) and remove the centring device (Fig. 169,2).
- Remove the spare wheel.

15.7 Tyre pressure

- Tyre pressure that is too low results in overheating of the tyre. Serious damage to the tyre can be the result.
- Check the tyre pressure before a journey and at 2-week intervals. Wrong tyre pressure causes excessive wear and can lead to damage or even to tyre burst. You can lose control of the vehicle.
- Use only valves that are approved for the specified tyre pressure.

▷ Only check the tyre pressure on cold tyres.

The payload and the durability of tyres is directly dependent on the tyre pressure. Air is a volatile medium. It is unavoidable that it will escape from tyres.

As a rule of thumb it can be assumed that a filled tyre loses pressure at a rate of 0.1 bar every two months. To prevent the tyres becoming damaged or burst, check the tyre pressure regularly.

▷ The information on pressure levels is valid for cold tyres and loaded vehicles.

▷ Pressure in hot tyres is higher than in cold tyres. Therefore, check the pressure when the tyres are cold.

▷ Tyre pressures in bar.

Max. permissible speed = 120 km/h (75 mph).

Please always observe the speed limits in the individual countries (see Chapter 18).

15 Wheels and tyres

The vehicles are constantly brought up to the newest technical standards. It is possible that new tyre sizes are not yet included in this table. If this is the case, any Dethleffs dealer will be happy to provide the newest values.

Reifendrucktabelle				Tyre pressure table				Tableau de pression des pneus			
Reifen	techn. zul. Gesamtmasse Mono-Achse kg	techn. zul. Gesamtmasse Tandem-Achse kg	Reifendruck bar	Reifen	techn. zul. Gesamtmasse Mono-Achse kg	techn. zul. Gesamtmasse Tandem-Achse kg	Reifendruck bar	Reifen	techn. zul. Gesamtmasse Mono-Achse kg	techn. zul. Gesamtmasse Tandem-Achse kg	Reifendruck bar
Tyre	Maximum permissible gross weight Mono axle	Maximum permissible gross weight Tandem axle	Tyre pressure	Tyre	Maximum permissible gross weight Mono axle	Maximum permissible gross weight Tandem axle	Tyre pressure	Tyre	Maximum permissible gross weight Mono axle	Maximum permissible gross weight Tandem axle	Tyre pressure
pneus	P.T.A.C. Essieu simple	P.T.A.C. Double essieu	Pression des pneus	pneus	P.T.A.C. Essieu simple	P.T.A.C. Double essieu	Pression des pneus	pneus	P.T.A.C. Essieu simple	P.T.A.C. Double essieu	Pression des pneus
155/80 R13 LI79	bis 700		2,50	215 R14C LI112	bis 1.600		3,30				
					1.700		3,50				
165/80 R13 LI83	bis 700		2,30		1.800	3.500	3,80				
	800		2,50		1.900		4,00				
	900		2,80		2.000		4,30				
185/70 R13 LI86	bis 700		2,50	185/60 R15C LI94	bis 1.200	2.200	3,60				
	800		2,70		1.300	2.500	4,00				
	900	1.800	2,70		1.300		4,00				
	1.000	2.000	3,00								
				195/65 R15 LI91	bis 1.000	2.000	2,50				
195/70 R13XL LI90	bis 1.000	2.000	2,90		1.100	2.200	2,70				
	1.100	2.200	3,10								
				195/65 R15XL LI95	bis 1.100	2.000	2,50				
185/70 R14 LI88	bis 900	1.800	2,60		1.200	2.200	2,80				
	1.000	2.000	2,80		1.300	2.500	3,10				
	1.100	2.200	2,80								
				195/70 R15C LI104	bis 1.100	2.000	3,00				
185 R14C LI102	bis 1.100		3,30		1.200	2.200	3,25				
	1.200		3,30		1.300	2.500	3,50				
	1.300		3,50		1.400		3,75				
	1.400		3,80		1.500	2.800	4,00				
	1.500		4,25		1.600		4,25				
	1.600	2.800	4,50		1.700		4,50				
195/65 R14 LI89	bis 1.000	2.000	2,50	205/70 R15C LI106	bis 1.100	2.000	3,00				
	1.100	2.200	3,00		1.200	2.200	3,00				
					1.300	2.500	3,20				
195/70 R14 LI91	bis 1.000	2.000	2,50		1.400		3,50				
	1.100	2.200	2,70		1.500		3,80				
					1.600	2.800	4,00				
195/70 R14XL LI95	bis 1.100	2.000	2,50		1.700		4,20				
	1.200	2.200	2,80		1.800	3.500	4,50				
	1.300	2.500	3,10								
				215/70 R 15 C LI109	bis 1.100	2.000	3,00				
195/70 R14XL LI96	bis 900	1.800	2,50		1.200	2.200	3,25				
	1.000	2.000	2,50		1.300	2.500	3,50				
	1.100	2.200	2,50		1.400		3,50				
	1.200		2,70		1.500		3,70				
	1.300	2.500	3,00		1.600	2.800	4,25				
					1.700		4,70				
195/70 R14C LI104	bis 1.100	2.000	3,30		1.800	3.500	4,90				
	1.200	2.200	3,50		1.900		5,10				
	1.300	2.500	3,80								
	1.400		4,10	225/70 R15C LI112	bis 1.100	2.000	3,00				
	1.500		4,50		1.200	2.200	3,00				
	1.600	2.800	4,80		1.300	2.500	3,00				
	1.700		5,20		1.400		3,00				
					1.500		3,00				
195 R14C LI106	bis 1.100		3,00		1.600	2.800	3,50				
	1.200		3,00		1.700		3,50				
	1.300		3,20		1.800	3.500	3,70				
	1.400		3,40		1.900		4,00				
	1.500		3,75		2.000		4,30				
	1.600	2.800	4,00								
	1.700		4,50	215/55 R16XL LI97	bis 1.100		2,70				
	1.800	3.500	4,50		1.200		2,70				
					1.300		3,00				
205 R14C LI109	bis 1.600		3,70		1.400		3,00				
	1.700		4,00								
	1.800	3.500	4,25								
	1.900		4,50								

Es dürfen nur die Reifengrößen montiert werden, die in den Zulassungsdokumenten aufgeführt sind. Lastindex beachten!

Only the tyre sizes listed in the vehicle documentation can be mounted. Refer to the load index!

Seuls les pneus dont la taille est indiquée dans les documents d'enregistrement peuvent être montés. Tenir compte de l'indice de charge !

16 Troubleshooting

Chapter overview

This chapter contains instructions about possible faults in your vehicle.

The faults are listed with their possible causes and corresponding remedies.

The instructions address the following topics:

- chassis
- braking system
- electrical system
- gas system
- gas cooker
- gas oven
- microwave oven
- heater
- boiler
- water heater
- refrigerator
- air conditioning unit
- water supply
- body

The specified faults can be remedied with relative ease and without a great deal of specialised knowledge. In the event that the remedies detailed in this instruction manual should not be successful, an authorised specialist workshop must find and eliminate the cause of the fault.

16.1 Chassis

Fault	Cause	Remedy
Coupling does not lock in place after being placed on top	Ball larger than Ø 50 mm	Remove dirt
		Contact customer service
	The coupling interiors are soiled and no longer work automatically	Clean well and lubricate (not stabiliser)
Caravan cannot be detached	Ball worn	Position the caravan and towing vehicle in the same direction and detach. Immediately replace the worn ball

16.2 Braking system

- ▶ Have defects on the braking system immediately remedied by an authorised specialist workshop.
- ▶ Follow maintenance or manufacturer specifications.

16 Troubleshooting

16.3 Electrical system

▷ When the living area battery is changed, only use batteries of the same type.

▷ See Chapter 9 for changing the fuses.

Fault	Cause	Remedy
Road light system does no longer work correctly	Bulb is defective	Unscrew cover of the relevant light, replace bulb. Note volts and watts specifications
	Contacts on the plug and/or in the socket have oxidised and/or are contaminated	Clean contacts and spray with contact spray
	Short circuit caused by water in the plug and/or socket	Open plug and/or socket, dry out, and spray with contact spray
	Cable interruption on the plug and/or socket	Open plug and/or socket, re-connect cable (see connection diagram in Chapter 9)
Road light system does not match the towing vehicle light system	Contact connections within the plug have been reversed	Check contact allocation and wiring on the plug/connector of the caravan
Interior lighting no longer works correctly	Bulb is defective	Remove cover, replace bulb. Note volts and watts specifications
	Power pack switched off	Switch on power pack
	Fuse on the 240 V automatic circuit breaker is defective	Replace fuse
	Fuse on power pack or at transformer/rectifier defective (Autark Package)	Replace fuse
12 V interior lighting does not work	240 V automatic circuit breaker switched off	Switch on 240 V automatic circuit breaker
	Power pack switched off	Switch on power pack
	12 V power supply switched off (Autark Package)	Switch on 12 V power supply on the control panel
	Fuse on the power pack is defective	Replace fuse
	Power pack/transformer/rectifier defective	Contact customer service
240 V interior lighting does not work	240 V automatic circuit breaker switched off	Switch on 240 V automatic circuit breaker
No 240 V power supply despite connection	240 V automatic circuit breaker has triggered	Switch on 240 V automatic circuit breaker

16 Troubleshooting

Fault	Cause	Remedy
No voltage from the living area battery (Autark Package)	Living area battery is discharged	Charge living area battery immediately ▷ Total discharge damages the battery.
		If the vehicle is to be laid up for a long period, fully charge the living area battery beforehand
		Discharging is caused by inactive appliances (see Chapter 9)
Extractor hood does not work	Extractor hood defective	Contact customer service
	Power pack is defective	Contact customer service
	Fuse on power pack or at transformer/rectifier defective (Autark Package)	Replace fuse
	240 V automatic circuit breaker has triggered	Switch on 240 V automatic circuit breaker
Air conditioning unit cannot be switched on or off	240 V automatic circuit breaker has triggered	Switch on 240 V automatic circuit breaker
	Remote control battery is empty	Change remote control battery

16.4 Gas system

- In case of a defect of the gas system (gas odour, high gas consumption) there is danger of explosion! Close the regulator tap on the gas bottle immediately. Open doors and windows and ventilate well.
- In case of a defect in the gas system: Do not smoke; do not ignite any open flames, and do not operate electric switches (light switches etc.).
- Have the defect in the gas system repaired by an authorised specialist workshop.

Fault	Cause	Remedy
No gas	Gas bottle empty	Changing gas bottles
	Gas isolator tap closed	Open the gas isolator tap
	Regulator tap on the gas bottle is closed	Open regulator tap on the gas bottle
	Outdoor temperature too low (-42 °C for propane gas, 0 °C for butane gas)	Wait for higher external temperatures
	Built-in appliance is defective	Contact customer service

16 Troubleshooting

16.5 Cooker

16.5.1 Gas cooker/gas oven

Fault	Cause	Remedy
Ignition fuse does not operate (flame does not burn after the control knobs are released)	Heat-up time is too short	Keep control knob pressed for approx. 15 to 20 seconds after ignition
	Ignition fuse is defective	Contact customer service
Flame extinguishes when being reduced to its minimum setting	Thermocouple sensor is incorrectly set	Set thermocouple sensor correctly (do not bend). The sensor tip should protrude by 5 mm beyond the burner. The sensor neck should not be more than 3 mm away from the burner ring; if necessary, contact customer service

16.5.2 Microwave oven

- Only qualified personnel may repair the microwave oven. Improper repairs can cause major risks to the user.

Fault	Cause	Remedy
Microwave oven does not cut in	Fuse is defective	Replace fuse
	Door of the microwave oven is not properly closed	Remove foreign bodies stuck in the door of the microwave oven and close door properly

16 Troubleshooting

16.6 Heater, boiler and water heater

In the event of a defect contact the nearest customer service workshop of the relevant appliance manufacturer. The list of addresses is enclosed with the accompanying appliance documentation. Only authorised qualified personnel may repair the appliance.

16.6.1 Trumatic S 3004 (P) / S 5004 hot-air heater

Fault	Cause	Remedy
For heater with automatic ignition: Heater does not ignite	Battery on the automatic ignition empty	Changing the battery on the automatic ignition

16.6.2 Alde heater/boiler

▷ If a fault occurs in the system, the cause is shown on the display.

Fault	Cause	Remedy
Heater does not ignite with gas operation	Lack of gas	Open regulator tap and gas isolator tap
		Connect a full gas bottle
Heater does not ignite	Battery voltage too low	Charge battery. If the battery voltage rises above 11 V, the heater is switched on automatically
Heater does not ignite at 240 V electrical operation	No 240 V power supply	Switch on 240 V automatic circuit breaker
		Connect 240 V power supply
Heater switches off	Overheating	Allow the heater to cool. To reset the display, interrupt the 12 V power supply to the heater and switch it back on again
Heater running, but no heat at the convectors	Circulating pump does not work	Switch on room thermostat
		Contact customer service
Heater and circulating pump running, but no heat at the convectors	Air in the heating system	Bleed hot-water heater

16.6.3 Truma boiler

	Fault	Cause	Remedy
Gas operation	Red indicator lamp "Fault" illuminates	Air in the gas pipe system	Switch off and on again. After two futile ignition attempts, wait for 10 minutes before trying again
		Lack of gas	Open regulator tap and gas isolator tap
			Connect a full gas bottle
		Defect of a safety element	Contact customer service
	Green indicator lamp behind knob is not lit	Fuse of the boiler is defective	Replace fuse
		Fuse in the electronic control unit has been triggered	Contact customer service
	Red and green indicator lamps are not lit	No power supply	Connect the power supply
		Fuse of the boiler is defective	Replace fuse
Electrical operation	Boiler is connected to power supply but is not heated	Operating switch is switched off	Switch on the operating switch, the indicator lamp on the switch must light up
		Operating switch defective	Contact customer service
		240 V automatic circuit breaker switched off	Switch on 240 V automatic circuit breaker
		240 V power supply disconnected	Connect 240 V power supply
		Overtemperature fuse has triggered	Switch off boiler and switch on after approx. 5 minutes
		Heating coil of the boiler is defective	Contact customer service

16.6.4 Truma water heater

Fault	Cause	Remedy
The water heater is connected to power supply but does not heat	Operating switch is switched off	Switch on operating switch; the red indicator lamp must be lit
	Operating switch defective	Contact customer service
	240 V automatic circuit breaker switched off	Switch on 240 V automatic circuit breaker
	240 V power supply disconnected	Connect 240 V power supply
	Fuse is defective	Replace fuse
	Heating coil in the water heater is defective	Contact customer service

16 Troubleshooting

16.7 Refrigerator

In the event of a defect contact the nearest customer service workshop of the relevant appliance manufacturer. The list of addresses is enclosed with the accompanying appliance documentation. Only authorised qualified personnel may repair the appliance.

16.7.1 Thetford refrigerator without SES (error diagnostics)

Error code	Cause	Remedy
1	The 240 V power supply is 75 % under the required operating voltage	Contact customer service
2	The 12 V power supply is 75 % under the required operating voltage	Contact customer service
3	The refrigerator is operated at 240 V, even though no 240 V mode has been selected	Contact customer service
4	The refrigerator is operated at 12 V, even though no 12 V mode has been selected	Contact customer service
5	The refrigerator is operated in gas operation mode even though gas operation mode has not been selected	Contact customer service
6	The gas valve has been identified as open even though it should be closed	Contact customer service
7	The gas valve has been identified as closed even though it should be open	Contact customer service
8	The 240 V power supply is 20 % under the required operating voltage	Check 240 V power supply
9	The gas supply has been cut off. The flame has not been ignited within 30 seconds in gas operation mode	• Check the gas supply • Repeat ignition 3 to 4 times • Contact customer service
10	The refrigerator is set to 12 V mode and the vehicle engine is not running	Start the vehicle engine or select a different energy source
11	The refrigerator is set to "AUTO" mode and no energy source is available	Provide an energy source and reset the refrigerator. Switch the refrigerator off and on again for this purpose
12	–	Contact customer service
13	The temperature sensor is defective	Check whether the plug is inserted properly above the fin inside the refrigerator. If so: Contact customer service
14	The connection between operating controls and control device is interrupted	Contact customer service

16.7.2 Refrigerator Thetford N3000

Fault	Cause	Remedy
Refrigerator does not work	Refrigerator is not plugged in	Check the connections and connect the refrigerator
	Refrigerator is switched off	Switch the refrigerator off and on again
Refrigerator does not switch on when operating in 240 V mode	No 240 V power supply	Connect 240 V power supply
		Switch to a different energy source
Refrigerator does not switch on when operating in 12 V mode	12 V fuse on the starter battery is defective	Check the fuse and replace if necessary
	The engine is not running	Switch on the engine and change to a different energy source if necessary
Refrigerator does not switch on when operating in gas mode	Lack of gas	Open regulator tap and gas isolator tap
		Connect a full gas bottle
		Switch the refrigerator off and on again
		Switch to a different energy source

16.8 Air conditioning unit

16.8.1 Teleco

Fault	Cause	Remedy
Air conditioning unit does not cool	No 240 V power supply	Connect 240 V power supply
	Fuse is defective	Check fuse and replace if necessary
	Temperature below 16 °C	
	Temperature has been set incorrectly	Adjust the temperature
	Air filter soiled	Replace the air filter

16.8.2 Dometic

Fault	Cause	Remedy
Air conditioning unit does not work	No 240 V power supply	Connect 240 V power supply
	Fuse is defective	Check fuse and replace if necessary
Air conditioning unit does not cool	Temperature below 18 °C	Adjust the temperature
	Temperature has been set incorrectly	

16 Troubleshooting

Fault	Cause	Remedy
Air conditioning unit does not warm up	Temperature above 40 °C	Adjust the temperature
	Temperature has been set incorrectly	
No air circulation in the vehicle	Air filter soiled	Clean air filter
Water is entering the vehicle	Drainage holes for condensation are clogged	Clean the drainage holes

16.9 Water supply

Fault	Cause	Remedy
Leakage water inside the vehicle	A leak has occurred	Identify leak, re-connect water pipes
No water	Water tank is empty	Replenish drinking water
	Water drain cock open	Close water drain cock
	Fuse of the water pump is defective	Replace fuse
	Water pump defective	Exchange water pump (have it exchanged)
	Water pipe snapped off	Straighten water pipe or replace
	Power pack is defective	Contact customer service
Toilet has no flush water	Water tank is empty	Replenish drinking water
	Fuse for toilet is defective	Replace fuse
Water drains from the shower tray slowly or does not drain at all	The vehicle is not in a horizontal position	Position the vehicle horizontally
Drain on the single lever mixer tap is clogged	Perlator calcified	Unclip the perlator, de-calcify in vinegar water (only for products made from metal)
Water jets on the shower nozzle clogged	Water jets calcified	De-calcify shower nozzle in vinegar water (only for products made from metal) or rub off soft nozzle burling
Milkiness of the water	Tank filled with dirty water	Clean water tank mechanically and chemically; then disinfect and rinse copiously with drinking water
	Residues in the water tank or water system	Clean water system mechanically and chemically; then disinfect and rinse copiously with drinking water

16 Troubleshooting

Fault	Cause	Remedy
Any change in the taste or odour of the water	Tank filled with dirty water	Clean water system mechanically and chemically; then disinfect and rinse copiously with drinking water
	Fuel filled into the water tank by mistake	Contact a specialist workshop
	Microbiological deposits in the water system	Clean water system mechanically and chemically; then disinfect and rinse copiously with drinking water
Deposits in the water tank and/or water-carrying components	Water excessively long in the water tank and in water-carrying components	Clean water system mechanically and chemically; then disinfect and rinse copiously with drinking water

16.10 Body

Fault	Cause	Remedy
Flap hinges/door hinges are difficult to operate	Flap/door hinges are not sufficiently lubricated	Lubricate flap hinges/door hinges with acid-free and resin-free grease
Hinges/joints in the bathroom unit/toilet compartment are difficult to operate/make a grating noise	Hinges/joints are not sufficiently lubricated	Lubricate hinges/joints with solvent-free and acid-free grease ▷ Spray cans often contain solvents
Storage compartment hinges are difficult to operate/make a grating noise	Storage compartment hinges are not sufficiently lubricated	Lubricate storage compartment hinges with acid-free and resin-free grease

▷ The authorised dealers and service centres are available for any spare parts requirement.

17 Special equipment

17.1 Weight details for special equipment

- The use of accessories, parts and fittings not supplied by Dethleffs may cause damage to the vehicle and jeopardise road safety. Even if an expert's report, a general type approval or a design certification exists, there is no guarantee for the proper quality of the product.
- Every alteration of the original condition of the vehicle can alter road behaviour and jeopardize road safety.
- No liability can be assumed for damage caused by products which have not been approved by Dethleffs. This also applies to impermissible alterations to the vehicle.

Weight details for Dethleffs special equipment are listed in the table below. If these objects are either carried in or on the vehicle and are not part of the standard equipment, they must be taken into consideration when calculating the payload.

All weight details are "approximate".

Observe the max. permissible gross weight.

Item designation	Surplus weight (kg)
Waste water pipes, heated	2
Waste water tank, mobile	3
Airmix	1
Load	22-35
External connection, audio	1
External shower	2
External flap	2
Autark Package (depending on equipment)	35-85
Car radio and CD	2
Oven	12
Bed widening	5
Direct water supply	2
Roof rail	5
Drawbar covering	8
"Kissenschlacht" ("Pillow fight") decoration package	1
Extractor hood	3
DuoControl switching facility, gas	2
Conversion door, single-section	6
Single bed, foldable, side	19
12 V electrical	5
Spare wheel	16-30
Spare wheel support under the body	6
Bunk bed	10
Window, front	5
Fire extinguisher 6 kg	8
Flat screen	6

17 Special equipment

Item designation	Surplus weight (kg)
Floor warming unit, electrical	9
External gas socket	1
Smooth plate	1 kg/m^2
Roof of glass-fibre-reinforced plastic (GRP)	0.6 kg/m^2
Holder for flat screen	6
Trumatic heater	7
Heater cover (fireplace)	2
Heki skylight (Heki 2)	13
Insect screen door	3
Air conditioning unit	40
Refrigerator with freezer compartment	30
Slatted frame, head section erectable	1
Microwave oven	15
Mover (electrical package)	70–100
Repair kit	1
Radio preparation	4-10
Satellite unit with hinged mast (BAS 60)	8
Satellite unit	15-24
Satellite antenna mast	2
Stabilising supports	3
Chain-stitch rug	5-10
Hot water supply with boiler	20-25
Hot water supply with hot water source	15
Water tank	3
Winter comfort package (depending on equipment)	40-70
Ultraheat additional heater	2
Additional pump for the Alde heater	1

18 Helpful notes

Chapter overview

This chapter contains helpful tips for your journey.

The instructions address the following topics:

- Road assistance in European countries
- Traffic rules in European countries
- Gas supply in European countries
- Toll regulations in European countries
- Safe ways to spend the night during travel
- Camping in winter

At the end of the chapter there is a checklist containing the most important equipment for your trip.

18.1 Dethleffs travel tips on the iPhone

▷ The information provided in this chapter is also available as an iPhone app. For further information please refer to the Dethleffs Web site and the Apple App Store.

▷ Use the adjacent QR-Code to access the download option for the Dethleffs app in the Apple App Store.

18.2 Traffic rules in foreign countries

▷ The vehicle driver is required to inform himself as to the traffic rules of the countries in which he plans to travel before beginning the trip. Information is available, for example, from the automobile clubs or the country representatives.

▷ In some European countries warning vests must be worn when exiting the vehicle outside of towns in the case of vehicle failures or accidents.

Information about the traffic rules is particularly important, since the respective country's laws apply in case of accidents or damage. For your own safety always observe the following points when travelling abroad:

- Have your green insurance card on you.
- Take an "Accident report" form from your insurance with you.
- Always have the police record the accident.
- Do not sign documents that you have not read and understood completely.

18 Helpful notes

18.3 Help on Europe's roads

Country German embassy	✚ Emergency services ★ Police	Auto club emergency call Breakdown service
Belgium Brussels ☎ +32 2 7 87 18 00	✚ 100/112 ★ 101/112	ADAC Munich +49 89 22 22 22 ☎ TCB Brussels +32 2 2 33 22 11
Bulgaria Sofia ☎ +359 2 91 83 80	✚ 112/150 ★ 112	ADAC Sofia +30 21 08 93 77 77 ☎ UAB Sofia +359 2 935 79 35 [1)]
Denmark Copenhagen ☎ +45 35 45 99 00	✚ 112 ★ 112	ADAC Copenhagen +45 93 17 08/ ☎ FDM +45 27 07 07
Germany	✚ 112 ★ 110	ADAC Munich +49 89 76 76 70 ☎ ADAC +49 1802 22 22 22/ 22 22 22 [1)]
Estonia Tallinn ☎ +372 6 27 53 00	✚ 112 ★ 112	ADAC Munich +49 89 22 22 22 ☎ EAK +372 6 97 91 00
Finland Helsinki ☎ +358 9 45 85 80	✚ 112 ★ 112	ADAC Munich +49 89 22 22 22 [2)] ☎ Autoliitto Helsinki +358 9 77 47 64 00
France Paris ☎ +33 1 53 83 45 00	✚ 112 ★ 112	ADAC Munich +49 89 22 22 22 ☎ ADAC Lyon +33 8 25 80 08 22
Greece Athens ☎ +30 21 07 28 51 11	✚ 112 ★ 112	ADAC Athens +30 21 08 93 77 77 ☎ ELPA +30 21 06 06 88 00
Great Britain London ☎ +44 20 78 24 13 00	✚ 112 ★ 112	ADAC Munich +49 89 22 22 22 ☎ AA +44 87 05 44 88 66
Ireland Dublin ☎ +353 1 2 69 30 11	✚ 112 ★ 112	ADAC Munich +49 89 22 22 22 ☎ AA Dublin +353 1 6 17 99 99
Iceland Reykjavík ☎ +354 5 30 11 00	✚ 112 ★ 112	ADAC Munich +49 89 22 22 22 ☎ F.I.B +354 4 14 99 99
Italy Rome ☎ +39 6 49 21 31	✚ 112 ★ 112	ADAC Munich +49 89 22 22 22 ☎ +39 06 4 99 81
Croatia Zagreb ☎ +385 1 6 30 01 00	✚ 112 ★ 112	ADAC Zagreb +385 1 3 44 06 66 ☎ HAK +385 1 661 19 99
Latvia Riga ☎ +371 67 08 51 00	✚ 112 ★ 112	ADAC Munich +49 89 22 22 22 ☎ LAMB +371 67 56 62 22
Lithuania Vilnius ☎ +370 52 10 64 00	✚ 112 ★ 112	ADAC Munich +49 89 22 22 22 ☎ LAS +370 5,210 44 33

18 Helpful notes

Country German embassy	✚ Emergency services ★ Police	Auto club emergency call Breakdown service
Luxembourg Luxembourg ☎ + 352 45 34 45-1	✚ 112 ★ 112	ADAC Munich +49 89 22 22 22 ☎ ACL +352 4 50 04 51
Macedonia Skopje ☎ +389 2 3 09 39 00	✚ 194 ★ 192	ADAC +381 11 3 33 11 11 ☎ AMSM +389 2 318 11 81
Montenegro Podgorica ☎ +382 20 44 10 00	✚ 94 ★ 92	ADAC Zagreb +385 1 3 44 06 55 ☎ AMSCG +382 20 23 49 99
Netherlands The Hague ☎ +31 70 3 42 06 00	✚ 112 ★ 112	ADAC Assen +31 592 39 05 60 ☎ ANWB +31 88 2 69 71 47
Norway Oslo ☎ +47 23 27 54 00	✚ 113 ★ 112	ADAC Munich +49 89 22 22 22 ☎ NAF +47 92 60 85 05
Austria Vienna ☎ +43 1 7 11 54	✚ 112 ★ 112	ADAC Munich +49 89 22 22 22 ☎ ÖAMTC Wien +43 1 71 19 90 ARBÖ +43 1 23
Poland Warsaw ☎ +48 22 5 84 17 00	✚ 112 ★ 112	ADAC Munich +49 89 22 22 22 ☎ PZM +48 22 8 49 93 61
Portugal Lisbon ☎ +351 21 8 81 02 10	✚ 112 ★ 112	ADAC Munich +49 89 22 22 22 ☎ ACP +351 213 18 01 00
Romania Bucharest ☎ +40 21 2 02 98 30	✚ 112 ★ 112	ADAC Munich +49 89 22 22 22 ☎ ACR +40 21 3 15 55 10
Russia Moscow ☎ +7 495 9 37 95 00	✚ 03 ★ 02	ADAC abroad +1049 89 22 22 22 ☎ RAS +7 495 6 29 07 07
Sweden Stockholm ☎ +46 8 6 70 15 00	✚ 112 ★ 112	ADAC Munich +49 89 22 22 22 ☎ MR +46 8 690 38 00
Switzerland Bern ☎ +41 31 3 59 41 11	✚ 112 ★ 112	ADAC Munich +49 89 22 22 22 ☎ TCS +41 22 417 27 27
Serbia Belgrade ☎ +381 11 3 06 43 00	✚ 194 ★ 192	ADAC Belgrade +381 11 3 33 11 11 ☎ AMSS (011) 3 33 11 00
Slovakia Bratislava ☎ +421 2 59 20 44 00	✚ 112 ★ 112	ADAC Munich +49 89 22 22 22 ☎ SATC +421 2 68 24 92 11
Slovenia Ljubljana ☎ +386 1 4 79 03 00	✚ 112 ★ 112	ADAC Zagreb +385 1 3 44 06 50 ☎ AMZS +386 1 5 30 51 00

Country German embassy	✚ Emergency services ★ Police	Auto club emergency call Breakdown service
Spain Madrid ☎ +34 91 5 57 90 95	✚ 112 ★ 112	ADAC Barcelona +34 93 5 08 28 28 ☎ RACE +34 9 02 40 45 45
Czech Republic Prague ☎ +420 2 57 11 31 11	✚ 112 ★ 112	ADAC Prague +420 2 61 10 43 51 ☎ UAMK CR +420 261 104 111
Turkey Ankara ☎ +90 312 4 55 51 00	✚ 112 ★ 155	ADAC emergency call from abroad (0216) 999 1010 +90 216 9 99 10 10 TTOK +90 212 282 81 40 ☎
Hungary Budapest ☎ +36 6 14 88 35 00	✚ 112 ★ 112	ADAC Munich +49 89 22 22 22 ☎ MAK +36 1 3 45 18 00
Cyprus Nicosia ☎ +357 22 45 11 45	✚ 112 ★ 112	ADAC Athens +30 21 08 93 77 77 ☎ AA +357 22 31 32 33

1) In the mobile communication network

2) Dialling code to Germany can also be 9 901 49, 9 94 49 or 9 99 49, depending on the telecommunications provider

Date 08/2013
Specifications without guarantee

18.4 Speed limits

- Please always observe the speed limits in the individual countries.
- The caravans have been designed for a technically permissible maximum speed of 100 km/h. Therefore never drive faster than 100 km/h.

For information, the speed limits of the countries visited most (all specifications in km/h):

Country	In built-up areas	Outside built-up areas	Motorway
Belgium	50	90/120 [1) 2)]	120 [2)]
Bulgaria	50	70	100
Denmark	50	70	80
Germany	50	80 [3)]	80/100 [4) 5)]
Estonia	50	70	–
Finland	50	80	80
France	50	90 [6) 7)]/110 [1) 2) 6) 7)]	130 [2) 6) 7)]
Greece	50	80	80
Great Britain	48	80/96 [1)]	96 [4)]
Ireland	50	80	80

Country	In built-up areas	Outside built-up areas	Motorway
Iceland	50	80	–
Italy	50	70	80
Croatia	50	80	80
Latvia	50 [8)]	80/90 [1) 9) 10)]	–
Lithuania	50	90 [11)]	90
Luxembourg	50	75	90 [12)]
Macedonia	40/60	80	80
Montenegro	50	80	–
Netherlands	50	80/90 [1) 13)]	90 [13)]
Norway	50	60 [14)]/80	60 [14)]/80
Austria	50	70/100 [15)]	80/100 [15)]
Poland	50/60 [16)]	70/80 [1)]	80
Portugal	50	70/80 [17)]	100 [18)]
Romania [19)]	50	70/80 [1)]	90
Russia	60	70	90 [20)]
Sweden	50	80 [21)]	80 [21)]
Switzerland/Liechtenstein	50	80 [22)]	80
Serbia	50	80	80
Slovakian Republic	50	90	90
Slovenia	50	80	80
Spain	50	70/80 [1)]	80/90 [23)]
Czech Republic	50	80	80
Turkey	50	80	110
Hungary	50	70	80
Cyprus	50	70	80

1) On expressways, on roads with more than one lane in each direction and on roads resembling highways

2) In the event of accidents involving speeds in excess of 100 km/h insurance payments may be reduced as caravans are only type approved for speeds up to 100 km/h

3) 60 km/h, if the vehicle is approved as a special motor vehicle motorhome over 3.5 t

4) Towing vehicles may not drive all the way on the left side (or right side, in the case of GB) on three-lane motorways; in Germany and France, this applies for towing vehicles longer than 7 m and for motor vehicles/towing vehicles with a total weight over 3.5 t

5) For towing vehicles up to 3.5 t with special permit and identification

6) On wet roads, reduce speed by 10 km/h outside of towns and on motorways by 20 km/h

7) Drivers who have possessed a driving license for less than 3 years may drive max. 80 km/h on country roads, max. 100 km/h on motorways and max. 110 km/h on superhighways

8) In residential areas, 20 km/h

9) Drivers who have had their driver's licence for less than two years must not drive faster than 80 km/h

10) From 1/12 to 1/3, max. 80 km/h on motorways

11) Outside towns on non-paved roads, max. 70 km/h
12) In wet conditions, reduce speed by 15 km/h
13) Applies for towing vehicles up to 3.5 t
14) Towing vehicles with a trailer with no brakes having a total weight of more than 300 kg
15) With trailer of over 750 kg (max. permissible gross weight of 3.5 t), the following applies: On country roads 80 km/h, on superhighways 100 km/h. For towing vehicles over 3.5 t permissible gross weight, 70 km/h outside towns, 80 km/h on superhighways
16) From 11 p.m. to 5 a.m., max. 60 km/h
17) According to traffic signs
18) Drivers who have had their driver's licence for less than one year must not drive faster than 90 km/h. Corresponding stickers (available from ACP offices) must be affixed in a clearly visible position on the rear of the vehicle
19) For motor vehicle drivers with less than 1 year of driving experience, maximum speeds minus 20 km/h apply
20) Drivers who have had their driver's licence for less than two years must not drive faster than 70 km/h
21) Trailer with no brakes whose maximum permissible gross weight is two times the unladen weight of the towing vehicle: 40 km/h
22) In Liechtenstein: 60 km/h for trailers over 1,000 kg total weight
23) For trailers under 0.75 t

Date 07/2011
Source: ADAC
Specifications without guarantee

18.5 Driving with low beam in European countries

▷ In many countries driving with low beam is also required during the day. The regulations differ depending on the country. Information is available, for example, from the automobile clubs or the country representatives.

18.6 Sleeping in the vehicle away from camping areas

Country	Sleeping on roads and fields		Sleeping on privately owned lands		Comments
	Yes	No	Yes	No	
Belgium		X	X		On highway rest areas max. 24 hours permitted On private land, the vehicle may only be positioned with the permission of the landowner
Bulgaria		X		X	For reasons of safety, we strongly advise against staying overnight outside campsites
Denmark		X	X		
Germany	X		X		Staying overnight for one night to restore driving ability is permitted. Observe regional and local limitations
Estonia	X		X		Outside closed villages only; next to farms with farmer's permission only

18 Helpful notes

Country	Sleeping on roads and fields		Sleeping on privately owned lands		Comments
	Yes	No	Yes	No	
Finland		X	X		Possible with the permission of the land owner
France	X		X		Permission from the local authorities or the owner of the land is required. Parking and staying overnight on free areas is prohibited
Greece		X		X	
United Kingdom		X	X		Staying overnight in some places with local permission only. Staying overnight on the side of the road is not permitted
Ireland	X		X		Staying overnight on a beach or on the side of some streets and bridges is not permitted
Italy	X		X		Staying overnight at parking areas and rest areas is permitted. Observe the local limitations. Parking and staying overnight on free areas is prohibited
Croatia		X		X	
Latvia	X		X		Outside closed villages only; next to farms with farmer's permission only
Lithuania	X		X		Outside closed villages only; next to farms with farmer's permission only
Luxembourg		X	X		Not near the Esch-sur-Sûre-See; max. two tents may be set up
Macedonia		X		X	
Netherlands		X		X	Overnight stays on streets and squares is allowed in some boroughs
Norway	X		X		Not on land used for farming or cultivated land; minimum distance to houses: 150 m
Austria		X	X		Staying overnight for one night to restore driving ability is permitted, but not in nature reserves. Observe regional and local limitations. Generally prohibited in the Tyrol
Poland		X	X		Permission of land owner required; not on the coast or in nature reserves
Portugal		X		X	
Romania		X		X	
Russia		X		X	

Country	Sleeping on roads and fields		Sleeping on privately owned lands		Comments
	Yes	No	Yes	No	
Sweden	X		X		Not on agriculture areas or in the vicinity of houses. Observe local restrictions
Switzerland		X	X		One overnight stay at highway rest areas and in some cantons is tolerated. Permission from local authorities required for staying overnight
Serbia		X		X	
Slovakian Republic		X		X	
Slovenia		X		X	
Spain	X		X		Some regional restrictions apply, especially on beaches; only with permission from local authorities
Czech Republic		X		X	
Turkey	X		X		Regional restrictions possible
Hungary		X		X	

Specifications without guarantee

18.7 Gas supply in European countries

General tips

Always observe the following information:

- Only go on vacation with completely filled gas bottles.
- Use all of the gas bottles' capacity.
- Take along adapter sets (available in camping supply stores) for filling gas bottles in foreign countries and for connecting a German gas regulator to foreign gas bottles.
- During the cold time of the year observe filling with propane gas component (butane does not gasify below 0 °C).
- Use blue bottles from the firm Campingaz (distributed world-wide). Only use gas bottles with safety valves.
- Buy a so-called self-filler bottle. Like a permanently installed gas tank this 11 kg bottle can be refilled at any auto gas filling station (directory available from the ADAC). Inspection at a technical inspectorate is required every 10 years.
- When bottles from other countries are used, check the gas bottle compartments to see if the gas bottles fit into them. Gas bottles from other countries do not always display the same size as the German Eurogas bottles.
- Follow the EU heating appliance directive. For information, visit www.truma.de

18 Helpful notes

For your information a list of the gas supply is given below for some of the most visited European countries:

Country	Gas supply	Provider	Info phone
Belgium	Identical gas bottles Exchanging and filling gas bottles possible	Belgian Shell and Totalfina, Brussels; Primagaz, Tessenderlo; Gasbottling, Gent; Semnickgas, Geraardsbergen	
Denmark	German 5 and 11 kg gas bottles are available for exchange at almost every campsite. Filling station for grey gas bottles available	BP Gas offers German gas bottles Kosan Gas As company	00 45/ 89 48 77 00
Finland	Finnish gas bottles available at NESTE petrol stations and country shops Adapters for Norwegian gas bottles can be purchased from the AGA company	Tehokaasu company (www.thokaasu.fi) Overview of provides from: AGA (www.aga.no), Fax: 00 47/22 02 78 05 Statoil, Fax: 00 47/22 96 22 10	
France	Foreign gas bottles cannot be filled or exchanged French gas bottles can be used by means of the Euro connection set		
Greece	German gas bottles can be filled using the Euro connection set; exchange and filling station mainly in larger cities only		
Great Britain	German gas bottles cannot be filled British gas bottles can be connected to German systems using an adapter (also available from Calorgas)	Calorgas company (www.calor.co.uk)	
Ireland	Gas bottles can be refilled	Noel Leaders Shop company, Tuam Road, Galway Calor Kosangas company, Dublin and Cork	(01) 50 5000 (021) 66 12 69
Iceland	Gas bottles can be refilled Yellow Icelandic gas bottles fit German systems with a rubber ring placed in the controller connection	Esso, Reykjavík	

18 Helpful notes

Country	Gas supply	Provider	Info phone
Italy	Gas supply through Euro filling and connecting set		
	Discharging of liquid gas at gas stations for camping vehicles with a permanently installed gas tank is not permissible on tax grounds		
Croatia	Gas bottles whose inspection lies less than 5 years back are filled in INA branches	INA	
	Adapter can be purchased at INA		
Netherlands	Identical gas bottles		
	Exchanging and filling gas bottles possible		
Norway	German gas bottles cannot be filled	Overview of provides from: AGA, Fax: 00 47/22 02 78 05 Statoil, Fax: 00 47/22 96 22 10	
	Adapters for Norwegian gas bottles can be purchased from the AGA company		
	Deposit gas bottles available		
Austria	Identical gas bottles		
	Exchanging and filling gas bottles possible		
Poland	Identical gas bottles		
	Exchanging and filling gas bottles possible		
Portugal	Deposit gas bottles available	Repsol; Cepsa	
Sweden	German gas bottles cannot be filled	Overview of provides from: AGA (www.aga.no), Fax: 00 47/22 02 78 05 Statoil, Fax: 00 47/22 96 22 10	
	Adapters for Norwegian gas bottles can be purchased from the AGA company		
Switzerland	Hiring of a Swiss gas bottle with pressure regulator possible	Shell Gas, Switzerland	00 41/ 3 27 58 75 55
	German gas bottles can be filled in exceptional cases		
Slovenia	German gas bottles can be filled We recommend bringing along the Euro filling and connecting set	Plinarna, Ljubljana; Plinarna, Maribor; Internia DD Ljubljana, Kozina; OMV Istrabenz DOO, Koper	

Country	Gas supply	Provider	Info phone
Spain	German gas bottles cannot be filled	Repsol Cepsa	00 34/ 901 10 01 00 00 34/ 913 37 75 29
	Hiring and filling of Spanish gas bottles possible when the gas connection has been adapted		
	6 kg deposit gas bottles can be used with adapter		
Czech Republic	German gas bottles can be refilled	Agip, Bohemia Gas, BP, Krainpol, Primaplyn Flaga-Plyn	
Turkey	Sale of 2 and 12 kg gas bottles; connection possible with adapter	Ipragaz company (www.ipragaz.com.tr/tupgaz-size-en-yakin-bayi)	
Hungary	Identical gas bottles	Primagaz, Totalgaz, Shellgas, Mol	
	Exchanging and filling gas bottles possible		
Norway	Norwegian 11 kg gas bottles can be used with adapter	Overview of provides from: AGA (www.aga.no), Fax: 00 47/22 02 78 05 Statoil, Fax: 00 47/22 96 22 10	

Date 07/2011
Specifications without guarantee

18.8 Toll regulations in European countries

Many European countries have introduced a mandatory toll system. The toll regulations and how they are collected vary greatly from country to country. Nevertheless, ignorance is no excuse. Penalties can be quite severe.

As is the case with traffic regulations, the vehicle driver is required to be familiar with the toll formalities before starting out on a trip.

Contact your automobile club or the Internet for further information.

18 Helpful notes

18.9 Tips on staying overnight safely during travel

Prudent behaviour is the most important protective measure for insuring a safe night in the caravan.

The risk of thievery is reduced to a minimum when the following basic rules are observed:

- Before commencing the journey, close and lock all windows, doors and sky-lights.
- If present: Switch on or activate anti-theft alarm and special door securing devices. Warning devices against gas assaults using anaesthetic gas are offered at camping supply stores.
- During high season do not spend the night at highway rest stops or parking areas located along typical vacation routes.
- If possible, stay overnight in large, occupied car parks, e.g. near a restaurant.
- Even if it is just for one night, go to a camping site.
- Only take with you those valuables which are absolutely necessary for the journey. If possible, store valuables in a small safe and not in the immediate vicinity of windows or doors.
- Always lock up the vehicle.

18.10 Tips for winter campers

The following tips will help make your winter camping experience as agreeable as possible.

- Reserve your parking place in good time. Good winter camping sites are often booked up early.
- Do not start your trip without winter tyres.
- Choose your parking place with care. Observe the ground beneath you. Snow and ice may melt.
- Place boards of a sufficient size under the jockey wheel and the corner steadies to prevent then from sinking when the snow thaws.
- When the vehicle has been positioned, release the handbrake to prevent freezing.
- Protect the handbrake lever and the accumulator against frost with protective covers.
- No snow walls should be allowed to cover the built-in forced ventilation.
- Protect the gas bottle compartment against freezing with a protective cover.
- Do not leave waste water in the tank but drain it into a bucket.
- Keep the built-in forced ventilation free from snow and ice.
- Make sure the air circulation is good. Good air circulation prevents moisture from collecting and makes it easier to heat the living area.
- Follow the instructions in the section "Gas supply in European countries".
- Use a two-bottle system with automatic controller for the gas system, so that the supply does not run out during the night.
- Only operate the gas system using propane gas.
- Do not use the space behind the heater as a storage compartment.
- Never operate catalytic ovens or infra-red gas radiators in the interior of the vehicle, since they consume oxygen for burning.
- Lay the 240 V power cable in such a way that the cable cannot be frozen or be damaged (e.g. during snow removal).
- Use a winter awning.
- When it is snowing heavily, clear the roof of the vehicle of snow regularly. A few centimetres of powdery snow serves as insulation, but wet snow quickly becomes a heavy burden.
- Before embarking on the return journey, remove all the snow from the roof to avoid impeding vehicles behind you with a "snow flag".

18 Helpful notes

18.11 Travel checklists

The following checklists will help that nothing important is left at home although not everything on the checklists might be necessary.

▷ Do not leave checking of documents (e.g. vehicle papers and information) as well as checking the condition of the vehicle until just before commencing the trip. Planning and checking documents well in advance will save unnecessary trouble.

Kitchen area

✓	Object	✓	Object	✓	Object
	Wiping cloth		Cleansing agent (detergent)		Salad servers
	Mug		Dishcloths		Chopping board
	Turnspit		Set of knifes and forks for grilling		Bowls
	Can opener		Coffeepot		Brush to wash the dishes
	Egg-cup		Corkscrew		Cloth to wash the dishes
	Ice cube tray		Kitchen paper		Matches
	Lighter		Spoons		Cups
	Bottle opener		Knifes		Plates
	Air-tight storage boxes		Garbage bags		Thermos jug
	Breakfast plate		Frying pans		Pots
	Forks		Stirring spoons		Glasses

Bathroom/sanitary items

	Towels		Toilet brush		Toothbrush glass
	Sanitary items		Toilet paper		

Living area

	Dustbin		Insect lamp		Rain clothes
	Road atlas		Insect repellent		First aid kit
	Bath towels		Deck of cards		Travel guides/parking guide
	Bath shoes		Broom		Rucksack
	Batteries		Candles		Sleeping bags
	Bed sheets		Dust pan		Pencils and paper
	Bed linen		Coat-hangers		Shoes
	Laundry bag		Clothes brush		Shoe polish
	Books		Pillow		Vacuum cleaner
	Camping guide		Map		Flash light
	Spare bulbs		Medicine		Pocket knife
	Water bottle		Music cassettes		Table cloth
	Binoculars		Neck-supporting pillow		Clothes pins
	Fire extinguisher		Sewing kit		Clothesline

18 Helpful notes

✓	Object	✓	Object	✓	Object
	Gas bottle		Radio		

Vehicle/tools

	Waste water container		Fabric tape		Screwdriver
	Adapter socket		Watering can for fresh water		Current-measuring instrument
	CEE adapter		Cable reel		Step
	Wire		V-belt		Wheel chocks
	Spare wheel		Glue		First-aid kit
	Spare lamps		Universal pliers		Vehicle jack
	Spare fuses		Compressor		Hazard warning triangle
	Replacement water pump		Luster terminals		Warning sign
	Hammer		Loops		Warning vest
	Flat wrench		Tube adapter		Flashing hazard warning light
	Gas filling adapter		Hose clips		
	Gas tube		Snow chains (winter)		

Outside

	Stay rope		Camping table		Lock
	Bellows		Luggage racks		String
	Camping chairs		Grill		Tent pegs/tightening ropes

Documents

	List of addresses		Registration book		Identity card
	Registration confirmation(s)		Driving licence		Passport
	Allergy certificate		Green insurance card		Writ of protection
	Instruction manuals		Vaccination certificate		Vignette/toll card
	Instruction leaflets for medicines		Credit card		Visa

19 Showmen package

Chapter overview

This chapter contains important information for the "Showmen package" special equipment.

19.1 Showmen package

The optional showmen packages 1-4 encompasses the following equipment, depending on the version:

- Mains water equipage (Package 1-4)
- Macerator toilet (Package 1-4)
- Showmen kitchen with 4-burner gas hob (Package 1 and 2)
- Showmen kitchen with ceramic hob (Package 3 and 4)
- Hot water boiler 30 litres (Package 1 and 3)
- Electronic instantaneous water heater (Package 2 and 4)
- 240 V connection (Package 1)
- 400 V connection (Package 2, 3 and 4)

▷ The following passages describe the electrical system, putting into operation as well as winter-proofing of the individual components. Further information about the appliances can be found in the instruction manuals for the appliances, included separately with the caravan.

19.1.1 240 V power supply

Information on operation of the 240 V power supply is available in Chapter 9.8.

19.1.2 400 V power supply

The 400 V power supply corresponds to a great extent to the 240 V power supply. It disposes additionally of a fuse box (Fig. 170) and a 400 V external socket (Fig. 171).

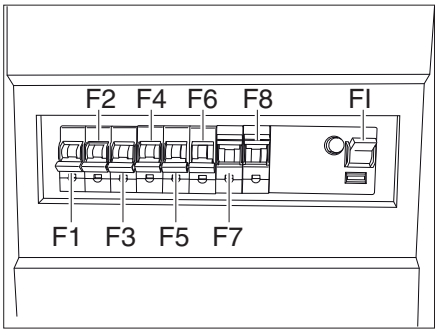

Fig. 170 Fuse box

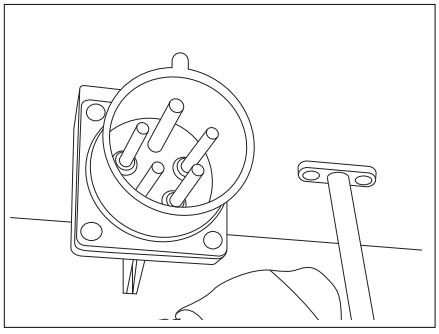

Fig. 171 400 V connection

It disposes additionally of a fuse box (Fig. 170) inside the caravan and a 400 V connection (Fig. 171) at the outside of the caravan.

▶ Repairs to the electrical system are to be carried out by qualified personnel only.

19 Showmen package

The 400 V power supply provides electricity for:

- sockets in the caravan with earth contact for appliances with maximum 16 A
- the interior lighting
- the instantaneous water heater
- the ceramic hob
- the external socket
- 12 V living area power supply

The electrical appliances which have been connected to the 12 V power supply system of the living area are supplied with power from the living area battery (Power Pack SE) or the power pack.

Connect the vehicle to an external 400 V power supply system as often as possible. The charger module in the transformer/rectifier automatically charges the living area battery (Power Pack SE).

19.1.3 400 V connection

▶ The external 400 V supply line must be protected by fuse with a fault current protection switch (FI-switch, 30 mA).

▷ Always disconnect the electrical connection between the towing vehicle and the caravan before the caravan is connected to the local power supply. In order to carry this out, disconnect the plug from towing vehicle socket.

▷ Check whether the power supply of the local utility company is suitable for the electrical system and appliances of the caravan with regard to the dimensioning of voltage, frequency and current.

19.1.4 Power cable for external 400 V connection

- ▶ Check cables/lines, plugs and connections for damage.
- ▶ Switch all the fuses and FI-switches in the caravan off before the caravan is connected to the power supply.

Power cable

- Depending of the length, five-conductor (5x10 - 5x16 mm^2) flexible rubber sheathed cable
- 1 plug with earth contact
- 1 socket with earth contact (connectors to EN 60309)

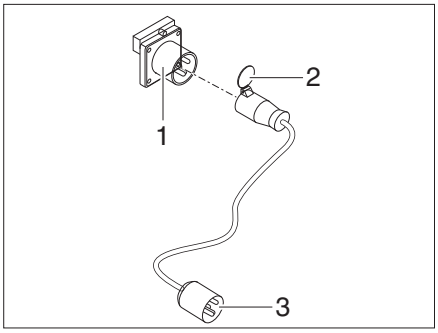

Fig. 172 Connection options for 400 V connection

Connection possibilities

We recommend a CEE 32 A connection cable with CEE 32 A plug and CEE 32 A socket as the supply line.

- ▷ Before the 400 V connection to the outside is established, all the fuses and the FI-switch have to be switched off.

Connecting the power cable:

- Open the cover (Fig. 172,2) of the CEE 32 A connecting cable.
- Plug the plug into the 400 V socket (Fig. 172,1) of the caravan.
- Plug the plug (Fig. 172,3) into the socket of the 400 V power supply unit at the site.
- Switch on the FI-switch at the caravan.
- Check whether the fault-current protection switch in the caravan functions by pressing the test button (pushbutton next to the FI switch) and switch it back on.

- ▷ If the power supply is not established after the fuses have been switched on, inform the site operator.

- ▷ Depending on the model, unlock the plug before pulling it out.

Disconnecting the supply line:

- Switch off the FI-switch at the caravan.
- Remove the plug from the socket of the 400 V power supply unit at the site.
- Remove the plug at the 400 V socket of the caravan.

19 Showmen package

19.2 Putting the showmen package into operation

▷ In order to avoid damage to the vehicle, observe the order during connecting.
▷ The pressure reducer is preset to 2 or 3 bars respectively depending on the package and may not be adjusted.

19.2.1 Establishing the mains water connection to the caravan

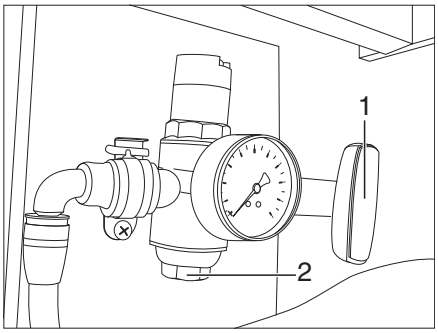

Fig. 173 Pressure reducer (main stopcock closed)

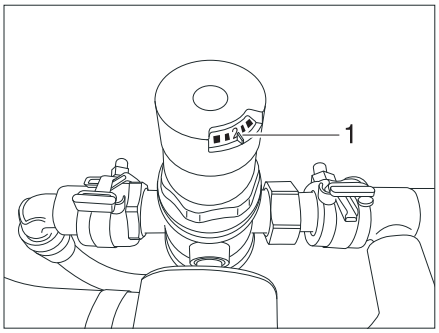

Fig. 174 Pressure reducer setting

- Close the inspection glass (Fig. 173,2) at the pressure reducer.
- Close the main stopcock at the pressure reducer (Fig. 173,1).
- Close all the water taps, stopcocks and drain valves.
- Check the pressure reducer setting of 2 bars (boiler version) or 3 bars (instantaneous water heater version) (Fig. 174,1).

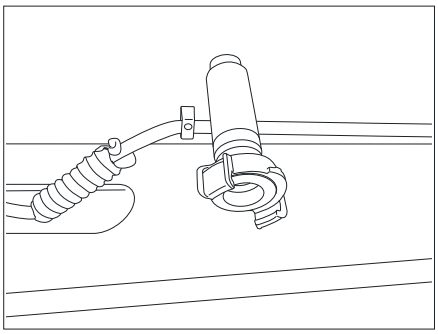

Fig. 175 Fresh water connection (brass piping)

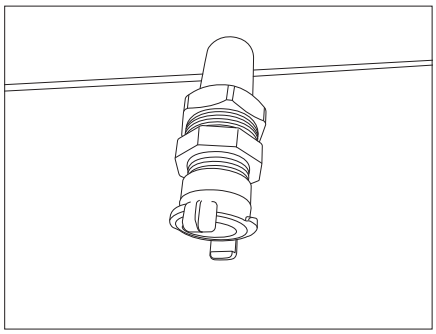

Fig. 176 Waste water connection (plastic piping)

▷ Do not confuse the connections. Otherwise fresh water can be pressed through the drains into the caravan.

- Connect fresh water to the bayonet fitting (brass piping, Fig. 175).
- Connect the waste water to the waste water connection (plastic piping, Fig. 176).

19 Showmen package

19.2.2 Filling the cold water pipes

- Open the main stopcock (Fig. 173,1) at the pressure reducer.
- Establish the fresh water supply.
- Open the cold water tap that is furthest away from the pressure reducer until water flows out.
- Close the water tap.
- Open all the further cold water taps in the caravan and wait until water flows out.
- Close the water taps.

19.2.3 Putting the boiler into operation

▷ Before the boiler is connected to the current supply, the water pipes and the boiler have to be filled with water.

The showmen packages 1 and 3 include a 30 l water boiler for water heating.

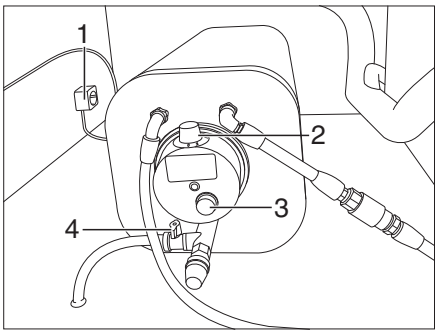

Fig. 177 Boiler

- Close the red drain valve (Fig. 177,4).
- Open the hot water tap that is furthest away from the pressure reducer until water flows out.
- Close the water tap.
- Open all the further hot water taps in the caravan and wait until water flows out. The boiler is filled.
- Close the water taps.
- Connect the caravan to the 240-V current supply of the site.
- Plug the plug of the boiler into the 240 V socket (Fig. 177,1).
- Switch the boiler on (Fig. 177,2).
  The red indicator lamp (Fig. 177,3) at the boiler lights up.
- Set the thermostat (Fig. 177,2) in accordance with the manufacturer specifications.

19 Showmen package

19.2.4 Putting the instantaneous water heater into operation

▷ Before the instantaneous water heater is connected to the current supply, the water pipes and the instantaneous water heater have to be filled with water.

The showmen packages 2 and 4 include an instantaneous water heater for water heating.

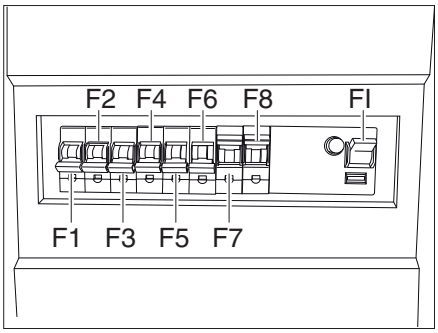

Fig. 178 Fuse box

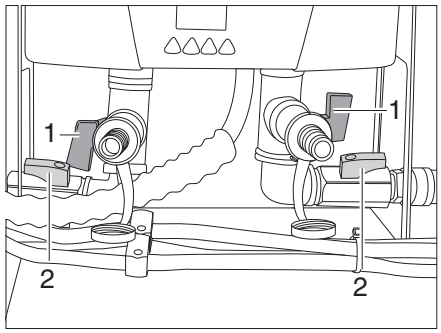

Fig. 179 Instantaneous water heater

Putting the instantaneous water heater into operation

- Close the red drain valves (Fig. 179,1).
- Open the black valves (Fig. 179,2).
- Switch off the fuses F1-F3 (Fig. 170).
- Open the hot water tap that is furthest away from the pressure reducer and wait until water flows out.
- Close the water tap.
- Open all the further hot water taps in the caravan and wait until water flows out. The instantaneous water heater is filled.
- Close the water tap.
- Establish a 400 V connection at the caravan.
- Switch on the FI-switch and fuses F1-F3 (Fig. 170).
- Carry out the settings in accordance with the manufacturer specifications.

19.2.5 Putting the macerator toilet into operation

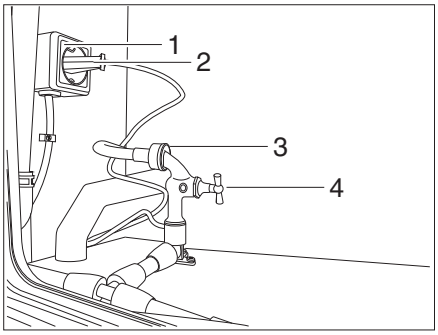

Fig. 180 Connection of macerator toilet

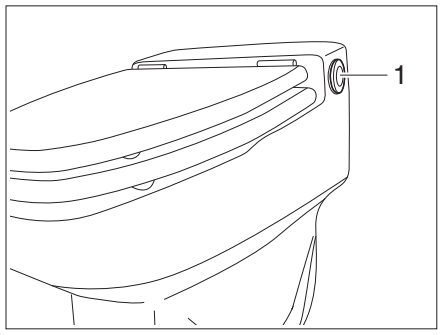

Fig. 181 Flush button of macerator toilet

- Connect the waste water connection of the toilet to the faeces drain of the site.
- Connect the bayonet fitting (Fig. 180,3) of the toilet.
- Open the water tap (Fig. 180,4).

- Plug the plug (Fig. 180,2) into the socket (Fig. 180,1).
- Press the toilet flush button (Fig. 181,1) several times until water comes.

19.2.6 Putting the ceramic hob into operation

Depending on the version the showmen package with 400 V power supply includes a ceramic hob.

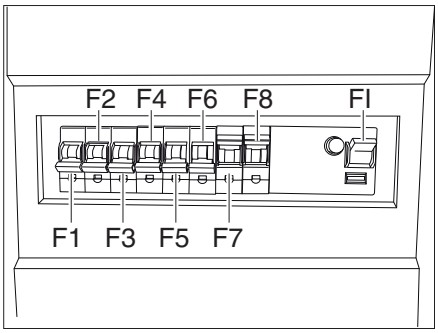

Fig. 182 Fuse box

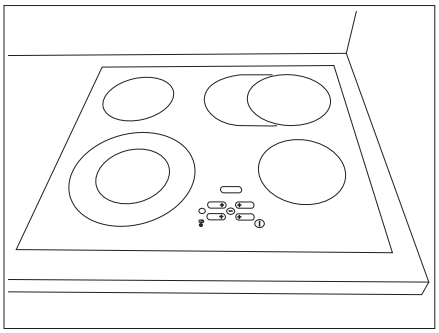

Fig. 183 Ceramic hob

- Establish a 400 V connection at the caravan (see Chapter 19.1.4).
- Switch on the fuses F4-F6 (Fig. 182).
- Switch on the ceramic hob in accordance with the manufacturer specifications.

19.3 Making the showmen package winter-proof

▷ Carry out all the procedures successively in the specified order.

▷ Use compressed-air only in combination with a food-safe filter.

▷ Use compressed air to blow through the mains water system.

▷ After the work has been completed, set all water taps to the middle position as well as all the regulator taps in the open position and store for winter. The regulator tap behind the pressure reducer remain closed until the system is put back into operation.

240 V showmen package

- Switch off the boiler and unplug it.

400 V showmen package

- Switch off the fuses F1-F3 for the instantaneous water heater.

19.3.1 Emptying the water pipes

- Remove the fresh water connection (brass piping, Fig. 175).
- Open all the water taps to the middle position.
- Connect the compressed air to the fresh water connection.
- Blow compressed air through the water pipes.
- Wait until no water comes out of the water tap.
- Close the water tap.
  Repeat the procedure for all further water taps.

19.3.2 Emptying the water supply line of the macerator toilet

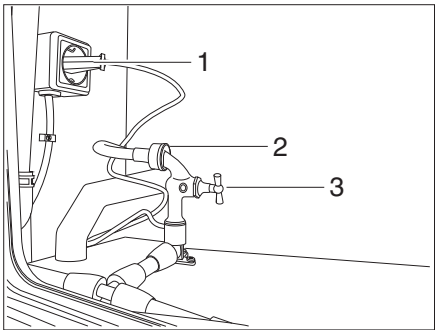

Fig. 184 Connection of macerator toilet

- Blow compressed air through the water pipes.
- Close the water tap of the macerator toilet (Fig. 184,3).
- Remove the pipe hose at the bayonet fitting of the toilet (Fig. 184,2).
- Connect the additional drain hose which leads to the outside to the bayonet fitting of the toilet (Fig. 184,2).
- Open the water tap of the macerator toilet (Fig. 180,3).
  Blow compressed air through the water supply line of the macerator toilet and flush the toilet at the time.
- Wait until no water comes out of the hose.
- Remove the compressed air.
- Close the main stopcock at the pressure reducer (Fig. 173,1).
- Close the water tap of the macerator toilet (Fig. 184,3).

19.3.3 Emptying macerator toilet

- Press the flush button at the toilet 3x to pump out the residual water.
- Pour 350 ml commercial antifreeze (-30 °C) into the toilet.
- Remove the plug (Fig. 184,1) of the macerator toilet out of the socket.

19.3.4 Emptying the boiler

▷ Observe the instruction manual of the manufacturer.

- Open the red drain valve (Fig. 177,4).
  The boiler drain completely.

19.3.5 Emptying the instantaneous water heater

▷ Observe the instruction manual of the manufacturer.

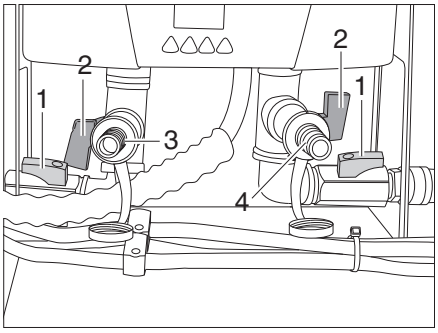

Fig. 185 Instantaneous water heater

- Close the main stopcock at the pressure reducer (Fig. 173,1).
- Close the black valves (Fig. 185,1).
- Connect the additional drain hose which leads to the outside to the left-hand connection (Fig. 185,3).
- Connect the compressed air to the right-hand connection (Fig. 185,4) of the instantaneous water heater (cold water end).
- Open the red drain valves (Fig. 185,2).
- Blow compressed air through the instantaneous water heater with a maximum of 2 bar until no water comes out of the additional drain hose (max. 300 ml).

19 Showmen package

Index

12 V fuses 99
at the vehicle (Power Pack SE) 99
For Thetford toilet 100
On transformer/rectifier EBL109 99
12 V indicator lamp 95
12 V main switch 95
12 V power supply 88
Switching off 95
Switching on 95
230 V automatic circuit breaker 92
230 V connection 48, 97
Fuse 101
Power cable 97
Troubleshooting 176
230 V power supply 96
230 V power supply (showmen package) 201
230 V power supply see also 230 V connection 97
400 V connection 202, 203
400 V connection power cable 203
400 V power supply (showmen package) 201

A

Accessories, fitting 22
Adapter cable 97
Adapter, thirteen-pin plug 101
Additional equipment 32
Add-on parts see special equipment 22
Air conditioning unit
Maintenance 161
Switching off 118
Switching on 118
Air conditioning unit (Dometic) 119
Location 119
Operation 119
Air conditioning unit (Teleco)
Switching off 119
Switching on 119
Air conditioning unit Dometic, troubleshooting 182
Air conditioning unit, troubleshooting 177
Air outlet nozzles, adjustment 106
Airmix 110
Alloy wheel rims 172
Annual inspection
Inspection records 14
Appliances 105
Manuals 22
Automatic ignition heater, changing battery 108
Axle load 35

B

Basic equipment 31
Battery
See Living area battery 88
Battery selector switch 94
Battery, wardrobe light, changing 163
Bed expansion for playing area 76
Beds 71
Before the journey 27
Bench seating group, sleeping conversion 73
Blind, bug window
Closing 61
Opening 61
Blind, cleaning 148
Blind, conversion door
Closing 51
Opening 51
Blind, skylight with snap latch
Closing 62
Opening 62
Blind, window
Closing 60
Opening 60
Boiler 120
Boiler (Alde)
Emptying 123
Switching off 123
Switching on 123
Troubleshooting 179
Water, filling with 123
Boiler (Truma) 120
230 V electrical operation 121
Combined operation 122
Emptying 122
Gas operation 121
Operating modes 120
Troubleshooting 180
Water, filling with 122
Brakes 42
Check 42, 175
Maintenance 159
Braking system, troubleshooting 175
Breakaway brake cable 28
Breakaway securing cable 28
Breakdown service in Europe 188
Bug window
Blind 61

Index

Bulbs, changing 162
Halogen spotlight 162
Recessed halogen light 163
Wardrobe light 163
Bunk bed 71
Butane gas 25, 79

C

Cable reel 97
Camping gas bottles, use 25, 80
Camping in winter 198
Capacity of the battery 87
Caravan
Correctly loaded: 34
Setting up 45
Care 145
At a temporary lay-up 154
At winter lay-up 155
Blind 148
Carpet 148
Curtains 148
External care 145
Extractor hood 151
Furniture surfaces 147
Gas cooker 148
High-pressure cleaner, washing with 145
Hot-water heater 159
In the winter 153
Insect screen 148
Interior care 147
Interior synthetic parts 147
Lamps 147
Net curtains 148
PVC floor covering 148
Roller insect screen 148
Roman shade 148
Sink 148
Synthetic leather covers 148
Teflon coverings 148
Underbody 147
Upholstery 147
Washing 145
Waste water tank 147
Water system 149
Windows 146
Carpet, cleaning 148
Changing wheels 170
At alloy wheel rims 172
Tightening torque 170, 172
Chassis inspection
Inspection records 14
Chassis, troubleshooting 175
Checklist 154
Before the journey 39
For a temporary lay-up 154
For the journey 199
Initial start-up after temporary lay-up 156
Road safety 39
Winter lay-up 155
Checks see checklist 39
Children's beds 71
Circulating pump 113
Circulating pump, setting the rotational speed 113
Circulation fan 109
Cleaning
Water pipes 149
Water tank 149
Cleaning see care 145
Closed circuit current 87
Condensation 55, 56
On the double acrylic glass pane 56
On the screwed connections in the floor 55
Connecting 28
Connecting cable see power cable 97, 203
Connection to the towing vehicle 101
Connection diagram 101
Connector plug 101
Conversion door 49, 51
Insect screen 50
Roman shade, closing 51
Roman shade, opening 51
Conversion door, inside
Locking 50
Opening 50
Conversion door, outside
Locking 49
Opening 49
Cooker 125
Troubleshooting 178
Corner steadies 46
Cranking down 47
Cranking upwards 47
Curtains, cleaning 148

Index

D

Danger of suffocation 22, 55
Detaching 29
Displays
- Filling level water tank 96
- Living area battery charging condition 95

Disposal
- Household waste 19
- Sewage 19
- Waste water 19

Door lock 49
Doors
- Conversion door 49
- Lock 49
- Troubleshooting 184

Drinking water 26
Drinking water filler neck 136
- Closing 136
- Opening 136

Driving in reverse 42
Driving with the caravan 41
DuoControl switching facility 84
During the journey 41

E

Electrical system 87
- 230 V connection, troubleshooting 176
- Explanation of terms 87
- Lighting, troubleshooting 176
- Safety instructions 26
- Troubleshooting 176

Entrance step 47
Environmental tips 19
Establishing mains water connection 204
External care 145
External flaps 52
- Flap lock 52, 53, 54

External gas connection 83
External mirrors 23
Extractor hood 129
- Care 151
- Filter, cleaning 151
- Troubleshooting 177

F

Fault current protection switch 97, 202
Fire
- Extinguishing 21
- Response to 21

Fire prevention 21
Fire risks, avoidance 21
Fixed bed 72
- Closing 72
- Opening 72

Flap lock
- Closing 52, 53, 54, 55
- Elliptical 53
- Flap for toilet cassette 54
- Opening 52, 53, 54
- Rectangular 53
- With push buttons 54
- With recessed handle 52

Flat screen 37
Flat screen, positioning 69, 70
Floor warming unit
- Switching off 117
- Switching on 117

Floor warming unit, electrical
- Overload protection 116
- Switching off 116
- Switching on 116

Fluorescent tubes, changing 162
Forced ventilation 22, 55
Furniture flaps, troubleshooting 184
Furniture surfaces, cleaning 147
Fuses
- 12 V fuses 99
- 230 V fuse 96, 101
- at the vehicle (Power Pack SE) 99
- For Thetford toilet 100
- Thermal cut-out in the power pack 92
- Transformer/rectifier EBL 109 99

Fuses see 12 V fuses and 230 V fuse 99

G

Gas bottle compartment 25, 80
Gas bottles
- Changing 82
- Safety instructions 25, 80

Gas connection, external 83
Gas consumption 81
Gas cooker
- Cleaning 148
- Switching off 127
- Switching on 126
- Troubleshooting 178

Gas inspection
- Inspection records 14

Index

Gas isolator taps 82
Symbols 82, 105
Gas odour 24, 79, 177
Gas oven 127
Switching off 127
Troubleshooting 178
Gas pressure regulator, screwed connections 81
Gas supply in European countries 194
Gas system 79
Defect 24, 79, 177
General instructions 24
Safety instructions 24, 79
Switching automatics 84
Troubleshooting 177
Gas tube, check 25, 80
General instructions 18
Guarantee 7
Guarantee conditions 7

H

Hand crank, corner steadies 47
Handbrake 45
Applying 22, 45
Releasing 45
Handling of tyres 169
Heat exchanger, heater, replacement 105
Heater 106
Air outlet nozzles, adjustment 106
Battery on the automatic ignition, changing 108
Circulation fan 109
First journey 106
Heat exchangers, replacement 105
Hot air distribution 106
See Hot-air heater 107
Switching off 108
Switching on 107
Troubleshooting 179
Heating 55
Heating mode 55
Heki skylight 63, 64
Closing 63, 64
Insect screen 64
Opening 63, 64
Roller insect screen 65
Roman shade 64
Ventilation position 63, 65
Help on Europe's roads 188
Helpful notes 187
High rate of gas consumption 24, 79, 177
High-pressure cleaner, washing with 145
Hinged window 58
Blind 60
Closing 57, 58
Continuous ventilation 58, 59
Opening 57, 58
Roller insect screen 60
Hot air distribution 106
Hot-air heater 107
Battery change at automatic ignition 108
Circulation fan 109
Switching off 108
Switching on 107
Troubleshooting 179
Hot-dip galvanised chassis 146
Hot-water heater
230 V electrical operation, selecting 113
Adjustment menu 112
Care 159
Fluid level, check 159
Gas and 230 V electrical operation, selecting 113
Gas operation, selecting 113
Heater, switching off 113
Heater, switching on 113
Heating fluid, topping up 160
Heating system, bleeding 160
Maintenance work 159
Operating unit 111
Rotational speed, circulating pump 113
Safety instructions 111
Start screen 112
Tool menus 112
Troubleshooting 179

I

Indicator lamp
12 V 95
Indicator lamp, toilet 141, 142
Information stickers 164
Inner door, troubleshooting 184
Insect screen, cleaning 148
Insect screen, conversion door
Closing 50
Opening 50
Insect screen, Heki skylight
Closing 64
Opening 64

Index

Inspection records
Water ingress test 9
Inspection work 157
Inspections 157
Annual inspection 12
Chassis 13
Further 12
Gas inspection 13
Installation diagram 103
Thirteen-pin socket 101
Towing vehicle 103
Interior care 147
Interior lighting
Bulbs, changing 162
Troubleshooting 176
iPhone app 187

L

Ladder, rear 36
Lamps 70, 162
Cleaning 147
Operating 70
Lay-up
During winter 155
Temporary 154
Leakage water inside the vehicle 183
Leakproof guarantee
Conditions 7
Lifting roof 66
Closing 66
Opening 66
Lift-off table 68
Conversion to bed foundation 68
Light metal wheel rims see alloy wheel rims 172
Lighting
Lamps, cleaning 147
Troubleshooting 176
Lights see bulbs, changing 162
Living area battery 88
Charging condition, displaying 95
Check 90
Discharging 89
Energy reserves 90
Instructions 88
Loading 90
Load 34
Roof rack 36
Load rack for roof loads 36
Load see also payload 34
Loads
Roof load 36
Lock
Conversion door 49
External flap 52, 53, 54
Low beam 192

M

Mains connection see 230 V connection 48
Maintenance work 157, 165
Air conditioning unit 161
Braking system 159
Hot-water heater 159
Stabilisers 158
Mass in ready-to-drive condition 31, 33
Maximum permissible gross weight 30, 33
Maximum permissible speed 190
Maximum speed, technically permissible 190
Microwave oven
Switching off 128
Switching on 128
Troubleshooting 178
Minimum nose weight 30

N

Net curtains, cleaning 148
No gas 177
Nose weight 28, 30, 35

O

Off-load voltage 87
Operating modes
Boiler (Truma) 120
Refrigerator 130, 131
Switching automatics, gas system 85
Oven see gas cooker or gas oven 126, 127
Overload protection 92
Overrun brake 28

P

Panel LT 109 (Power Pack SE) 95
Panel LT 222 96
Panel see also displays 95
Payload 30
Calculation 33
Composition 31
Example calculation 31, 33
Payload see also load 30

Index

People in the caravan 23, 41
Permissible gross weight see maximum permissible gross weight 30
Personal equipment 32
Power cable for 230 V connection 97
Power cable for 400 V connection 203
Power pack 92
  Switching on 92
  Thermal cut-out 92
Propane gas 25, 79
PVC floor covering 37
PVC-floor covering, cleaning 148

R

Rear axle load 28
Rear ladder 36
Rear seating group 75
Recessed halogen light 163
Refrigerator 48, 129
  12 V operation, switching on/off 131
  230 V operation, switching on/off 131
  Door lock 133
  Gas operation, switching off 130, 132
  Gas operation, switching on 130
  Operating modes 130, 131, 132
  Refrigerating temperature control 132
  Switching on 132
  Troubleshooting 181
  Ventilation grill, removal 129
Refrigerator door locking mechanism
  Closing 133
  Locking in the ventilation position 133
  Opening 133
Refrigerator Thetford N3000, troubleshooting 182
Refrigerator ventilation grill, removal 129
Registration 27
Remote control, air conditioning unit 118, 119
Risk of frost damage 26, 135, 139
Road safety 39
  Checklist 39
  Notes for 23
Roller insect screen, Heki skylight
  Closing 65
  Opening 65
Roller insect screen, window
  Closing 60
  Opening 60
Roman shade, cleaning 148
Roman shade, conversion door window
  Closing 51
  Opening 51
Roman shade, Heki skylight
  Closing 64, 65
  Opening 64, 65
Roof load 36
Roof rack, load 36
Roof rail 36
Round seating group, sleeping conversion 74

S

Safety instructions 21
  Changing wheels 170
  Cooker 125
  Electrical system 26
  Fire prevention 21
  Gas bottles 80
  Gas system 24, 79
  Hot-water heater 111
  Road safety 23
  Sleeping area partition 77
  Towing 24
  Water system 26
Sanitary fittings 135
Set of keys 27
Shower 140
Showmen package 201
  Emptying boiler 208
  Emptying instantaneous water heater 209
  Emptying macerator toilet 208
  Emptying water pipes 207
  Filling cold water pipes 205
  Mains water connection 204
  Making winter-proof 207
  Putting ceramic hob into operation 207
  Putting into operation 204
  Putting macerator toilet into operation 206
  Putting the boiler into operation 205
  Putting the instantaneous water heater into operation 206
Sink
  Cleaning 151
Sink, cleaning 148
Skylight with snap latch 62
  Blind 62
  Closing 62
  Opening 62

Index

Skylights 61
Skylight with snap latch 62
Sleeping area partition 77
Folding door 77
Sliding door 77
Sleeping conversion
Bed expansion for playing area 76
Bench seating group and side seating group ... 73
Rear seating group 75
Round seating group 74
Spare wheel 173
Spare wheel support 173
Special equipment 185
Description 17
Designation 17
Safety instructions 22
Weights 185
Speed limits 190
Stabiliser
AKS 3004 29
Maintenance 158
Stabiliser see also tow coupling 29
Stabilising lever 28
Start-up 27
After a temporary lay-up 156
After a winter lay-up 156
Staying overnight
Away from camping areas 192
On the road 198
Supports see corner steadies 46
Suspension table 66
Conversion to bed foundation 66
Switching automatics, gas system 84
Swivel table 67, 68
Conversion to bed foundation 67
For bed conversion 68
Locking 67
Table top, swivelling 68
Symbols
For notes 17
Gas isolator taps 82, 105
Synthetic leather covers, cleaning 148
Synthetic parts in the toilet and living areas, cleaning 147

T

Table 66
Teflon coverings, cleaning 148
Television 37, 69
Positioning 70
Pulling out 69
Storing away 37
Swivelling 69
Thetford cassette, retaining clip 143
Thetford toilet 140
Emptying 142
Flushing 141, 142
Fuse 100
Indicator lamp 141, 142
Troubleshooting 183
Water tank, emptying 142
Water tank, filling 142
Thirteen-pin plug, connection diagram 101
Tightening torque, wheels 170, 172
Tips 187
Toilet
Fuse 100
Toilet cassette
Emptying 143
Release 143
Removal 143
Toilet compartment 140
Ventilation 140
Toilet see also Thetford toilet 140
Toll regulations in European countries 197
Total discharge 87
Tow coupling 29
AKS 3004 29
Maintenance 158
Tow load 30, 35
Towing 24
Safety instructions 24
Towing vehicle installation 103
Traffic rules in foreign countries 187
Transformer/rectifier (EBL 109) 93
Functions 93
Location 94
Travel checklists 199
Travel cots 71

Index

Troubleshooting 175
230 V connection 176
Body 184
Boiler (Alde) 179
Boiler (Truma) 180
Braking system 175
Chassis 175
Cooker 178
Dometic air conditioning unit 182
Electrical system 176
Furniture flaps 184
Gas cooker 178
Gas oven 178
Gas system 177
Heater 179
Hot-air heater 179
Hot-water heater 179
Inner door 184
Lighting 176
Microwave oven 178
Refrigerator 181
Refrigerator Thetford N3000 182
Thetford toilet 183
Water heater 180
Water supply 183
Troubleshooting, air conditioning unit 177
TV cabinet 69
Tyre change see changing wheels 170
Tyre designations 169
Tyres 167
Designation 169
Excessive wear 23, 39, 167, 173
General instructions 167
Handling 169
Load-carrying capacity 170
Tyre pressure 173
Tyre selection 168

U

Ultraheat 114
Ultraheat additional electric heater 114
Switching off 114
Switching on 114
Underbody, maintenance 147
Unterlegkeile 46
Upholstery, cleaning 147

V

Vehicle identification plate 164
Vehicle jack 18, 172
Vehicle manuals and documents 17
Vehicle, washing 145
Ventilation 55
Toilet compartment 140
Volume of water, displaying 96

W

Wardrobe light 163
Warming unit for waste water tank
Switching off 117
Switching on 117
Warning stickers 164
Washing with a high-pressure cleaner 145
Waste gas vent cap 120
Waste gas vent on the right-hand side of the vehicle 120
Waste water tank 48, 137
Care 147
Cleaning 147
Emptying 137
Warming unit, switching on 117
Water heater (Truma) 124
Emptying 125
Switching off 125
Switching on 124
Troubleshooting 180
Water, filling with 125
Water ingress test
Guarantee 8
Inspection plan 8
Inspection records 9
Water pipes, cleaning 149
Water pump 135, 138
Water supply
General 135
Troubleshooting 183
Water system
Care 149
Cleaning 149
Disinfecting 150
Drinking water filler neck 136
Emptying 139
Filling 138
Safety instructions 26

Index

Water tank
- Cleaning 149
- Draining water 137
- Filling level, displaying 96
- Water, filling with 136

Water tank see also water system 136
Weight details for special equipment 185
Wheel rim size 170
Wheel rim type 167
Wheels 167
Window, conversion door
- Roman shade, closing 51
- Roman shade, opening 51

Windows 56
- Blind 59, 61
- Roller insect screen 59

Windows, cleaning 146
Winter care 153
Winter operation 153

Index